XVIII ICIEOM 2012
International Conference on Industrial Engineering and Operations Management
Guimarães - Portugal
July 9 - 11, 2012

Teaching Lean Thinking with a Business Game

Ivo Da Silva*, Rui Borges Lopes+

* Department of Economics, Management and Industrial Engineering, University of Aveiro, Campus Universitário de Santiago, 3810-193 Aveiro, Portugal
+ Department of Economics, Management and Industrial Engineering/CIO, University of Aveiro, Campus Universitário de Santiago, 3810-193 Aveiro, Portugal

Email: ivodasilva@ua.pt, rui.borges@ua.pt

Abstract

Lean thinking has become increasingly popular within industries. This was mostly due to the initial success of the Toyota Production Systems (TPS) which led other companies to implement its core principles (later named lean). In order to successfully implement lean it is important that the personnel involved have an understanding of its principles. In this paper we present a physical business game in order to demonstrate the applicability and advantages of lean thinking. The game was developed for classrooms, offering experimental learning, and thus enabling trainees to get a deeper understanding of the lean principles.

Business games are not only useful for teaching, but also to prevent or to explain the system mechanics before and after the implementation of lean principles. Moreover, these games may help to determine if a solution is valid, search for alternatives or even give the users a holistic view of the current and future system. The proposed business game is also a cheap alternative to expensive simulation software that not all companies can afford.

For the development of the business game, an initial unbalanced system was created. Throughout the iterations of the game, it is possible for the trainees to understand the benefits of implementing lean principles. The creation of the initial system, as well as its iterations, are presented and discussed in this paper.

Keywords: industrial engineering; operations management; lean thinking; business game.

1 Introduction

The origins of lean thinking can be traced back to the shop floor of the Toyota Motor Corporation (Ohno, 1988). The innovations which were introduced resulted from a scarcity of resources and intense domestic competition in the Japanese automobile industry. These innovations included the just-in-time (JIT) production system, the *kanban* method of pull production, and respect for employees (empowering them) (Hines et al., 2004). The main focus of this operations management design approach was the elimination of non-value adding activities (wastes), based on a continuous improvement philosophy. This approach became known as the Toyota Production System (TPS) (Rich *et al*., 2006).

As the TPS achieved outstanding results it became a case study, introducing all over the world principles and tools such as *jidoka*, JIT, *heijunka*, visual management, and the Toyota Way (Liker, 2004). The evolution of TPS lead to lean Production, term firstly coined by John Krafcik (Krafcik, 1988), which later led to Lean Thinking. Lean thinking focuses on five main principles which serve as guidelines to implement the philosophy in organizations (Lean Enterprise Institute, 2009):

- Specify value: the value that the product represents to the end costumer
- Map the value stream: map the processes in the organizations to recognize which add value to the product and which do not
- Creat flow: organize and synchronize all the processes in order to make the product flow smoothly to the costumer
- Pull philosophy: let the costumer pull the production from the upstream process

- Seek perfection: through continuous improvement and repeating the other principles in order to produce value without waste.

The philosophy has become increasingly popular within industries, possibly being the currently most employed philosophy. Associated with lean thinking there are some tools that can help every company in the lean journey (Womack and Jones, 1996) (Feld, 2000): value stream mapping (VSM), pull system, continuous flow, standardized and balanced work, 5S, and visual management. Such tools may help improve the company's processes and focus on the value adding activities. The underlying concepts are easily understandable, however, the positive impacts on a production system aren't easily perceived. With the purpose of helping trainees understand the concepts, corresponding impact, and why these tools are increasingly popular, a physical business game was developed. Business games are not only useful for teaching, but also to prevent or explain the system mechanics before and after the implementation of lean principles. The game proposed in this paper may also provide guidelines for the development of similar games, ultimately allowing to test/train future implementations of lean principles/tools.

The business game is composed of three iterations. In the first iteration, the production system is presented. The system starts out unbalanced, with surplus workstations and in a push philosophy. The main goal is to progressively improve the system effectiveness, through the use of lean tools. At the end of each iteration the current state of the system is compared with the previous state. The comparison is made using simple metrics, such as the client's fulfilled requests, work-in-progress (WIP), stocks of finished goods, and lead time. VSM will be used between iterations to help trainees identify improvement opportunities (Rother and Shook, 1999). Other tools/principles such as balancing, visual control, milk run, supermarkets, pull, *kanban*, and point-of-use-storage (POUS) will be introduced throughout the game.

This paper is divided into four main sections. In the first section, an introduction of the main concepts within lean thinking, the objective of the paper, and an overview of the game are made. Afterwards, the business game key elements are presented, namely, the chosen product, the assembly operations, the initial layout, and the game agents. A brief explanation of the reasoning behind the definition of these key elements is also provided. In section three, the business game rules and iterations are presented. It is also proposed how the lean principles and tools can be introduced in the game. Finally, concluding remarks and an outlook on future work are given.

2 Business game key elements

In order to obtain the business game some key elements had to be defined. The first element of the game to be defined, which would influence the remaining ones, is the object. Concerning the object, it should be easy to carry and have low acquisitions costs. Moreover, each game iteration should last 15 minutes, therefore, the assembly of the object should have moderate complexity, several components, and the components should have some mechanical resistance (as every object is to be reassembled several times). Based on these characteristics, the object chosen to be used was a 3 pin electrical plug UK type (with the number of required plugs being 42). In Figure 1 it can be seen the electrical plug (left), its components (centre) and corresponding descriptions (right).

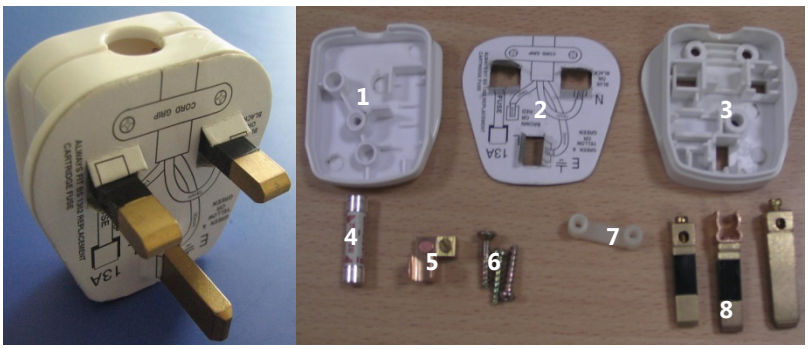

Components
1 – Back cover
2 – Instructions card
3 – Front cover
4 – Fuse
5 – Fuse support
6 – Screws (type A and type B)
7 – Cable holder
8 – Pins (simple, fuse support, and big)

Figure 1: 3 pin electrical plug UK type (left), its components (centre) and corresponding descriptions (right).

After defining the object to be used in the business game, the remaining key elements were defined, namely, the assembly operations, the initial layout and operations assignment, the layout sub-elements, and the agents involved.

2.1 Assembly operations

The electrical plug has 11 different components that are to be assembled in 11 distinct operations. In order to provide additional realism, two additional operations were added: packaging and labelling. The packaging is made using a 10x10 cm airtight bag, and the labelling requires sticking a label on the airtight bag according to the type of plug (three different types of plugs exist, which will be described later).

As not all operations have precedences it was necessary to assign some in order to have a manufacturing route. This route should not be optimum (e.g. it can have repeated tasks) so there may be room for future improvement. At this stage, the manufacturing route aimed at providing a set of assembly operations that is easy to perform (to avoid spending time on the assembly training). The proposed assembly operations, precedence diagram, and an exploded view of the assembly process can be seen in Figure 2. All of the operation times were obtained by the same person, and always concerning the same person performing the operations, thus insuring more consistent times. For each operation 15 times were obtained, from which the average value was acquired (displayed in the precedence diagram of Figure 2).

Assembly operations		Precedence
a)	Insert screw type A	-
b)	Put the cable holder	b
c)	Insert simple pin	b
d)	Insert big pin	b
e)	Insert pin with fuse support	b
f)	Fit fuse on the support	-
g)	Fit fuse support	f
h)	Fit fuse on the pin with support	d,e,f,g
i)	Assemble back cover	h
j)	Insert screw type B	i
k)	Insert instructions card	j
l)	Packaging	k
m)	Labelling	l

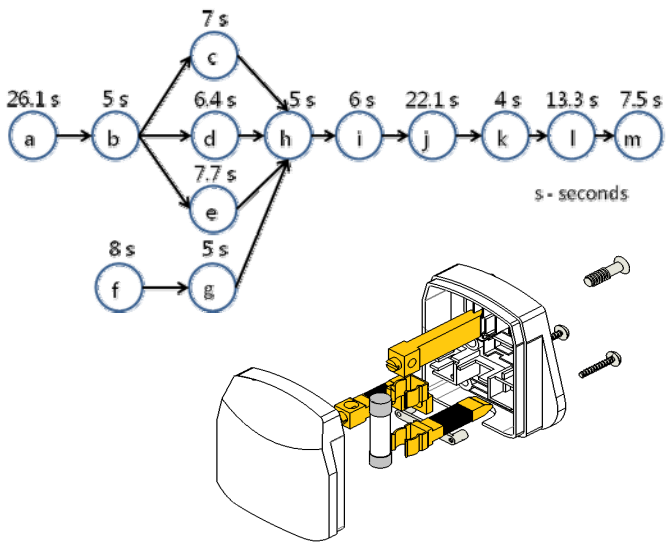

Figure 2: Assembly operations and precedences (left), precedence diagram (top-right), and exploded view of the assembly process (bottom-right).

2.2 Initial layout and operations assignment

The initial layout (seen in Figure 3, left) was based on the layout of another game used to teach balancing, since it had already proven to work favourably in a classroom environment. After the layout definition it

was possible to define the operations that were to be performed at each workstation (WS). At this point it was intended to obtain an unbalanced system. Since there are 42 plugs (assumed as the procurement) to be obtained in 15 minutes, the *takt* time is 21.4 s/plug. This time serves as a guideline to create the unbalanced system (which can be seen in Figure 3, right).

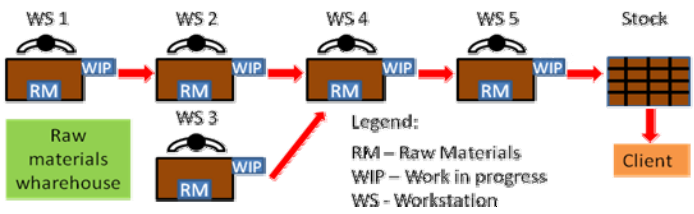

WS	Operations	Time (s)
1	a (x2), b	58.5
2	c, d, e	21.1
3	f	8
4	g, h, i, j	38.1
5	k, l, m	24.8
	Takt time	21.4 s/plug

Figure 3: Initial layout (left), and operations and corresponding overall time per WS (right).

For each WS the overall time (Figure 3, right) was obtained following the same procedure as described in section 2.1 for obtaining the operation times.

Additionally, the pre-assembly of the cable holder is also used. This operation has the following steps:

- insert screw type A
- insert cable holder
- pick up the screwdriver
- tighten the screw
- put down the screwdriver
- insert the second screw type A
- pick up the screwdriver
- tighten the screw
- put down the screwdriver.

The inclusion of this pre-assembly operation will enable some improvements further on.

2.3 Other business game elements

In order to provide additional complexity and realism to the business game additional concepts and elements were introduced:

- product differentiation
- work instructions
- client's procurement
- production orders
- client's procurement forecast
- zoning.

Like most production systems there is a product differentiation. In this game three different types of plugs are used, differing between them the type of fuse. The amperage of the three types of fuse is 2, 7 and 13 amperes (having 14 plugs for each type).

Concerning the work instructions, initially these are given with full detail. The objective is to allow the operator to sense the difficulty of interpreting and understanding these instructions, so that further on visual management can be introduced.

As any other game there must be a goal. Here, the goal is to fulfil the maximum number of client's requests. The client's procurement is going to be the same throughout the game, therefore allowing to easily determine the improvement associated with the implementation of lean tools in this scenario (based on the ability to fulfil the client's requests). Given the maximum number of plugs and time required to assemble them, it is possible to assume that the client will ask, on average, 2.8 plugs/minute. Two plugs in minutes [0;1], [5;6] and [10;11], and three plugs in the remain minutes. These are the quantities for each

minute and in every minute the client will only ask for one type of plug. Also, the client's procurement (quantity and type of plug) will only be revealed on the present minute.

Production orders (PO) were also introduced in the game. According to the assembly operations (Figure 2, left) and the layout (Figure 3, left), the product differentiation is made on WS 4, being supplied by WS 3. Therefore, the PO are to be delivered to these two WS. There is no criteria for how the operators have to start fulfilling the orders. In each iteration no more than four PO can be released, and once the operator starts to fulfil a PO that same order cannot be withdrawn. This will most likely result in some entropy in the system.

There is also a client's procurement forecast that should help the person responsible for releasing the PO (the planner). The forecast predicts exactly the same number and type of plugs in intervals of 5 minutes, so the planner has three PO for each interval and an extra one to correct possible PO mistakes. The client's procurement forecast doesn't allow the planner to predict what type of plug will be asked in the current minute.

Within the layout, zoning will exist which will work as a board game. The main zones, their location and purpose can be seen in Table 1. There is no specific format for the zones, however they should be allusive to the type of zone and distinct from each other to avoid mistakes.

Table 1: Zones location and purpose.

Zone	Location	Purpose
WIP	After every WS	To stock WIP made by the previous WS and for the next WS to realize the work it will be performing next
Finished Goods	After the last WS	To store all the finished goods that weren't expedited and to alert the expeditor of the current availability
Delivered Goods	Next to the finished goods zone	All the expedited products must go into this zone
Warehouse	Apart from the production system	To store components

2.4 Game agents

In order to start the game at least 10 people are needed. Table 2 displays the number of people required per role and the corresponding role description.

Table 2: Number of people per role, and role description.

Role	Number	Description
Operator	5	Worker assigned to each WS in order to assemble the components
Expeditor	1	Responsible for checking if there are enough finished goods to dispatch to clients
Planner	1	Person in charge of scheduling the production and releasing the PO
Time collector	3-5	Obtains the cycle times (CT) of the WS

If there isn't enough people to obtain the cycle times (CT) of the different WS, these should be obtained interchangeably in order to obtain trustworthy values. For example, if a time collector has to simultaneously obtain times for WS 1 and WS 2, those times should be concerning the same WIP. The CT in each WS starts from the moment the operator picks up the WIP (from the previous WS) and begins assembling the raw materials (RM), and finishes when (s)he drops the assembled product in the respective WIP zone.

3 Business game rules and iterations

Before the game starts it is necessary that the agents are aware of the game rules. These rules may change as the game unfolds and according to the improvements obtained. The rules were made to

guarantee a smooth gameplay and to introduce some entropy in the system, enabling the use of lean tools in order to obtain improvements.

3.1 First iteration: production system before implementing lean concepts

In the first iteration it is required that all the WS stay close to each other, preferably on the same table (or tables that are close together). This is to prevent the game agents from having to move a lot (e.g. in order to deliver the WIP to the specific zone), as it may distort the game results and cause confusion during the game.

The existence of WIP between each consecutive WS (in the respective zone) is required. This rule has two main objectives: to teach the operators the assembly operations they will have to perform in their WS; to simulate the scenario where some PO were left unfinished in the previous day. The planner also has to release a PO before the trainees start to learn the operations assigned to them.

The operators have to supply themselves. They must move to the warehouse and are only allowed to pick up the components which have ran out of stock in their WS. Moreover, they cannot take all the components from the warehouse.

All WS have a container for each component (properly identified). Since the incorporation factor for every component is 1 (except for the screw type A), the number of components to be placed in the different containers should purposely differ. This will cause the stock for each component to run out at different times, thus resulting in the existence of waiting times and a bullwhip effect.

In the warehouse the components must also be divided into different, properly identified, containers. Concerning the expeditor, (s)he can only expedite the products if the previous order has been fulfilled, otherwise (s)he needs to wait for the required finished goods.

One final aspect is how the WIP is transited from WS 4 to WS 5. In WS 4 the back cover of the plug is assembled, not allowing to distinguish the type of fuse from there on. To avoid mistakes, three containers (identified according to the three types of plugs) were placed between these WS.

3.2 Second iteration: implementing the first three lean principles

The second iteration starts with the first lean principle: specify value. All operations must be reviewed in order to identify and eliminate non-value adding work. For example, to assemble the cable holder (section 2.2) some operations are repeated, such as picking up and putting down the screwdriver. As the repetition doesn't add value, it can be eliminated. Moreover, these screws aren't required to be thigh until the very end. Therefore, they are only tighten enough to make sure the cable holder holds, reducing the lead time.

Afterwards, the following lean principle is introduced: map the value stream. For this iteration VSM was used to map the system. VSM allows to easily display key aspects such as the difference between lead and processing time, bottlenecks, the amount of WIP, and possible improvements. The VSM must be made as quickly as possible, by hand, and as big as possible (as seen in Figure 4).

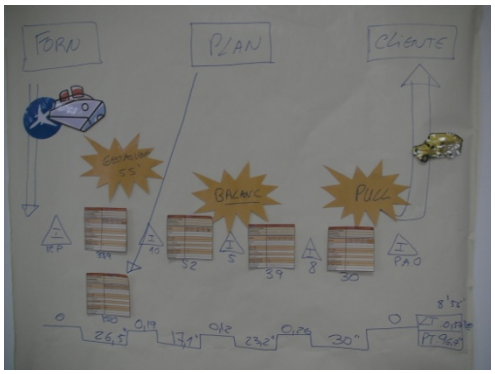

Figure 4: VSM example made during the game development, with predefined icons for faster completion.

In order to achieve the next lean principle, create flow, a balanced system is required. Therefore, the first improvement to be highlighted should be work balancing. Trainees are to develop a balanced system, although a predefined balanced system should be prepared in case they can't present one. This balancing aims to achieve two goals: to obtain continuous flow and to release one operator. It is suggested the use of a bar graph for a better understanding of the load balancing concept (as seen in Figure 5, left).

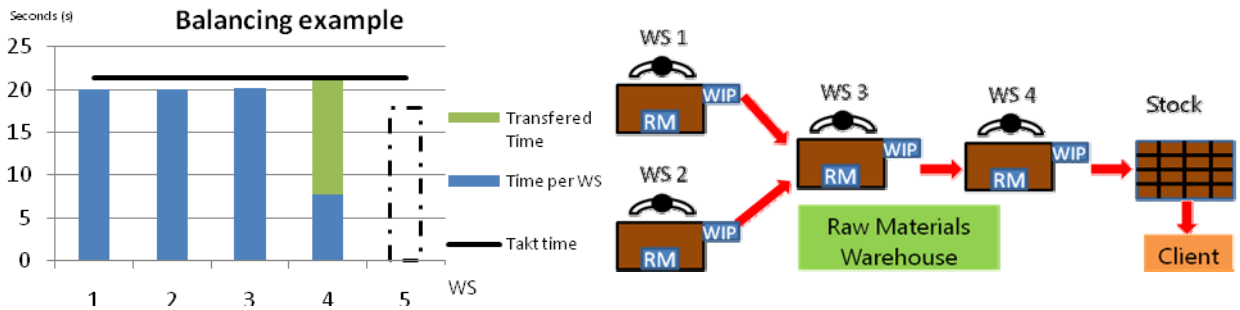

Figure 5: Load balancing with a graph bar (left) and the proposed balanced layout (right).

The new (proposed) layout has two repeated WS (1 and 2) which should output WIP alternately. Also, the person that becomes available should now start supplying all the WS (taking on the role of supplier). To the supplier applies the same rules as previously defined for the operators, being the needs of each WS triggered by empty containers. The work instructions have to be updated with the new operations and visual management is introduced at this point. The PO, client's procurement and forecast, and zoning remains unchanged. To verify if the system is balanced the newly assigned operations were timed under the same conditions used previously.

Table 3: Operations and corresponding overall time per WS.

WS	Operations	Time (s)
1	a (x2), b, c, d, e	19.89 (39.70)
2	a (x2), b, c, d, e	19.89 (39.70)
3	f, g, h, i, j	20.17
4	k, l, m	21.29
	Takt time	21.4 s/plug

3.3 Third iteration: applying lean tools

In the third iteration the mapping process must performed again, thus allowing the trainees to see the results of the implemented changes. In this iteration, seven lean tools are to be addressed:

- pull/*kanban*
- visual management/one-piece flow
- supermarkets
- *mizusumashi*
- POUS.

By using *kanban* we are also introducing another lean principle: pull philosophy. The *kanbans* will be delivered to the most downstream WS (WS 4). In WS 4 there will be a sequencer to guarantee the *kanban* cards follow the correct sequence. The *kanban* cards will be inserted in the material containers (Figure 8) specifying the container's component and corresponding quantity. An empty container will trigger the need to supply that specific component.

Visual management will help differentiate the types of product by colour, instead of fuse amperage. The product differentiation is made in WS 3 and the containers will be replaced by zones with colour codes (as

shown in Figure 6). Also, the fuses must have the same colour that was defined by the colour system (e.g. the fuse with 2 amperes in Figure 6 has the colour green).

Figure 6: Containers with *kanban* cards.

Figure 7: Zones with colour codes for each type of fuse (from left to right, 2, 7 and 13 amperes).

Concerning the zones with colour codes, another rule is introduced: in this zones it can only exist one of each type of product. This is to guarantee the one-piece flow, and every time WS 4 removes one type of WIP from the zones, the upstream WS (WS 3) can start working to replace the WIP corresponding to the empty zone. The same rule applies for the other WS.

Two kinds of supermarket were defined in this game: one for the finished goods (Figure 7) and another for the warehouse. For the finished goods, the sizing of the supermarket should not exceed the size required to contain 3 plugs per type, and the system is to always produce for the supermarket. For the warehouse, the supermarket concept will be limited since there isn't another system that supplies the warehouse. Thus, the components are simply divided into the same amount per container (according to the incorporation factor), as seen in Figure 9.

Figure 8: Finished goods supermarket with colour code.

Figure 9: Raw Materials Warehouse supermarket.

By having the same amount of components per container, when a component runs out of stock, all the remaining components also run out of stock. Therefore, all the supply needs happen at the same time and can be met at once. Henceforth the supplier will be called *mizusumashi* (*mizu*). The *mizu* is required to start supplying from WS 4 to upstream as the system is operating in a pull philosophy. Moreover, the *mizu* supply is triggered when a container in WS 4 becomes empty, where (s)he is to collect the empty container in each WS and exchange it with the container in the supermarket. To help the *mizu's* task a dashboard was made (again using visual management) with photos of every component (divided according to the WS).

Since waiting times are to be avoided, in each WS there must be a 2-bin replenishment system, point-of-use-storage (POUS). With this system every time a container runs out of components there is a backup container. When the operator empties a container (s)he should place it on the lower shelf of the POUS to trigger the *mizu*, and the backup container will fall, staying available to the operator with little effort. Figure 10 depicts the projected POUS.

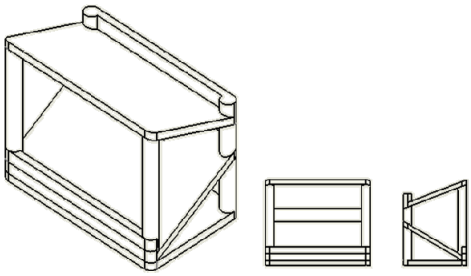

Figure 10: Projected POUS.

At this point the game doesn't need neither PO nor client's procurement forecast, as the system operates under the pull philosophy and with *kanban*. It is advisable to perform the mapping process once again (as at the end of each iteration) in order to identify the differences and compare the lead times.

4 Conclusions and future work

This paper presents a brief description of a physical business game developed to be used in classrooms. The game offers experimental learning, and thus enables trainees to get a deeper understanding of the lean principles. During the development phase the game was tested in a training session. Positive feedback was obtained although some variations were introduced (described in Table 4).

Table 4: Differences between the described game and the tested version, and corresponding motives.

Difference	Motive
Second and third iteration were merged	Due to the lack of time
Client's procurement forecast was not levelled (in terms of quantities) and exceeded the defined *takt* time	This is not a correct approach and could provide better results (in terms of lead time) in a push philosophy
Client's procurement forecast didn't exist	Forecast is common in most industries, therefore it makes sense to include it in the game
An *heijunka* box was used to help the production planning	*Heijunka* box is used if there are large setup times and changeovers. Moreover, it reinforces the idea that the system is working under a pull philosophy.

In the first iteration the game developed as intended, where problems occurred as expected. There were large amounts of WIP between every WS, huge lead times, finished goods that were not delivered, and out of the 15 client's orders, only 7 were satisfied. Trainees also complained about the waiting times and the difficulty of understanding the work instructions (without visual management).

The second iteration also unfolded as expected. The work instructions were considered easy to understand, and therefore there was no need to explain any operation. At the end of the iteration, the amount of WIP and finished goods (supermarket) were the expected, and 13 client's orders were fulfilled. Trainees also stated that the waiting times were significantly reduced.

In the tested version of the game, trainees weren't able to provide a balanced system, therefore the predefined balanced system was used, working as expected. The only problem was concerning WS 1 and WS 2, where operators were not able to synchronise correctly in order to supply WS 3 alternately.

Overall, the business game seems to have the minimum requirements to be implemented and is not too demanding concerning the materials required. An overview of the propose Business Game can be seen in figure 11. Still, some drawbacks could be found, such as the time needed to introduce all the theoretical concepts and the physical space required to implement it. Therefore, some aspects concerning the game may still require further testing.

Figure 11: An overview of the proposed business game.

Although there are currently several business games concerning lean that can be purchased online, these are normally overpriced and focus mainly on one or two important lean tools, disregarding the interdependence between lean principles and tools. This paper aims not only to propose an affordable physical business game but also to provide guidelines for creating similar games, possibly for different environments or trainees with different backgrounds/interests. It should also be noted that the improvements at each iteration were to be excepted, possibly even if no lean technique was used. The goal was not to demonstrate the efficiency of the methodology, but rather to showcase how their main techniques could be implemented in a real-life scenario.

As future work it is proposed the introduction of additional lean concepts such as *heijunka* box, poka-yoke systems, 5S, and single-minute exchange of die (SMED), possibly using additional iterations. Also, if a more complex system is required, additional product differentiation could be considered.

The warehouse supermarket concept can also be further developed. Components could be repacked during the game by a new agent or by the *mizu*. Additionally, a system that supplies the warehouse supermarket could be though off.

Concerning the third iteration, several concepts have to be assimilated, therefore it may be necessary to create a fourth iteration (which is to be tested and compared with the current proposal). Finally, the game is still unfinished as it needs further testing in order to obtain additional feedback for future improvements, thus achieving the last lean principle: seek perfection.

References

Feld, W. M. (2000). Lean Manufacturing: Tools, Techniques, and How to Use Them. Boca Raton: St. Lucie Press.

Hines, P., Holweg, M., & Rich, N. (2004). Learning to evolve: A review of contemporary lean thinking. International Journal of Operations & Production Management , 24 (10), 994-1011.

Krafcik, J. F. (1988). Triumph of the lean production system. Sloan Management Review , 30 (1), 41-52.

Lean Enterprise Institute. (2009). What is Lean - Principles. Retrieved 04 14, 2009, from Lean Interprise Institute| Lean Production | Lean Manufacturing | LEI | Lean Services: http://www.lean.org/whatslean/principles.cfm

Liker, J. (2004). The Toyota Way: 14 Management Principles from the World's Greatest Manufacturer. McGraw-Hill.

Ohno, T. (1988). Toyota Production System: Beyond Large-Scale Production. Portland: Productivity Press.

Rich, N., Bateman, N., Esain, A., Massey, L., & Samuel, D. (2006). Lean Evolution: Lessons from the Workplace. Cambridge: Cambridge University Press.

Rother, M., & Shook, J. (1999). Learning to See: Value Stream Mapping to Add Value and Eliminate Muda. Cambridge: Lean Enterprise Institute.

Womack, J. P., & Jones, D. T. (1996). Lean Thinking : Banish Waste and Create Wealth in Your Corporation. New York: Simon & Schuster.