XVIII ICIEOM 2012
International Conference on Industrial Engineering and Operations Management
Guimarães - Portugal
July 9 - 11, 2012

Industry Energy Efficiency Analysis in Northeast Brazil: Proposal of Methodology and Case Studies

Miguel O. Melo[*], Luiz Bueno da Silva[*], Sérgio Campello[+]

[*] Production Engineering, Federal University of Paraíba, Cidade Universitária, João Pessoa – PB, Brazil 58051-970
[+] Portal Tecnologia, Rua João Tude de Melo 77, Recife-PE, Brazil 52060-010

Email: mobcmelo@ct.ufpb.br, bueno@ct.ufpb.br, sergio@portaltecnologia.com.br

Abstract

The energy is a strategic input for the establishment of any regional economic and social development policy. Electricity is the basis for industrial production as well as in providing services chain; hence, the need to reduce the cost for that input is vital. The aim of this paper is to present industrial efficiency studies and three case studies in Northeast Brazil. There was a reduction until 69% in some cases. It was shown in this new methodology the points of energy losses and the most influenced industrial sectors within the production process and propose mitigation measures.

Keywords: energy efficiency; industrial production; energy management.

1 Introduction

Energy management in industry or commerce should not be limited to concerns about assistance in demand and taking energy-efficiency measures; it should also sustain the idea of knowing policies and rules of energy compound, quality certificates, as well as environmental and CO_2 certificates (Cullen et al. 2010, Siitonen et al. 2010).

Currently, there are several industrial sectors that have already obtained opportunities to improve energy efficiency in thermal systems, efficient motors, buildings with thermal insulation, efficient automated cooling, expert systems, and more efficient compressed air and chilled water and boilers (Laurijssen et al. 2010, Hasanbeigi et al. 2010, Kirschen et al. 2009, Hammond, 2007).

In industries it is common to apply conventional techniques in the operation of motor system. The interpretation of this reality drives us to undertake studies in this sector, proposing improvements in the production system. The following are noteworthy: Replacement of induction motors with a conventional high-yield motor, methods of motor drives with direct starters or star-delta starting device for smooth, soft-starter, and frequency inverter mainly used in processes that enable operation to change motor shaft speed (Panesi, 2006).

The energy is a strategic input for the establishment of any regional economic and social development policy. Electricity is the basis for industrial production, agriculture, as well as in providing services chain; hence, the need to reduce the cost for that input is vital. This produces great benefits to the production chain by making companies more competitive, and people benefit because the products' final price becomes cheaper.

The aim of this paper is to present a new methodology for assessing industrial efficiency energy and identify points of energy losses and the most influenced sectors within the production process, and propose mitigation measures.

2 General Considerations

From the scope of production chains, energy efficiency is concerned with productivity, which in turn is linked to economic results and management. The management aspects are those that relate to project deployment and implementation, hiring, training and retraining of personnel, as well as system evaluation in general (Jochen *et al.* 2007).

The most important energy-efficiency evaluation factors in economic terms are data consistency, behavior of the consumers, and incentive for participation as well as implementation of energy-efficiency programs (Vine *et al.* 2010).

Figure 1 presents a schematic diagram of the energy path between primary energy and time used for energy services. In this way, primary energy is transformed and presents a number of ways that can be measured by the same unit as the power was a kind of fluid through all sectors of the economy. The various ways in which energy is present in each group: primary energy, secondary energy, and energy service are represented in Figure 1 (Inee, 2001).

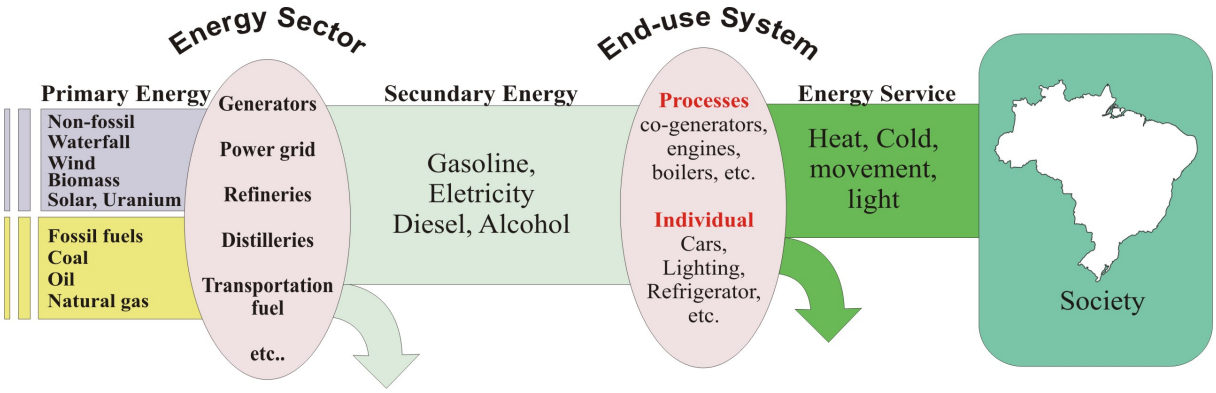

Figure 1: Chain of Energy Use

Improving efficiency means reducing consumption of primary energy required for the production of a given energy service. Reduction can occur at any step of this chain. It can also occur due to substitution of one form of energy for another end use. Historically, the replacement of fuel for electricity results in reduction of primary energy. In northeastern Brazil, today, the substitution of electricity by natural gas in some thermal processes may reduce the primary energy needed. For practical reasons, the activity areas are usually divided into two broad classes: supply and end use of energy.

2.1 The Current Situation

The energy cost in an industry has a great influence on their operating costs. Energy management is very often overlooked, thus generating significant energy waste and contributing to reduction in competitiveness among the enterprises.

Besides the need to save energy for environmental issues, there is an economic advantage in the saving. However, not all actions of electrical energy saving are easily returnable in financial terms (Peres *et al.* 2009). Saving electrical energy means to optimize production and reduce energy consumption and other inputs, thus reducing costs without losing efficiency and quality of services at any instance (Mamede, 2008, Reis *et al.* 2006).

Tackling waste is a virtual source of electric power production. In other words, energy that is not wasted can be used to move another load, thus making the source of production cheaper and cleaner, without polluting the environment (Granderson *et al.* 2010).

The Figure 2 illustrates the ecological footprint index of the world (ecologicalfootprint, (2011). In 2010 the index was 1.4 the capacity of the world, If the world keep the same pace the world will need two planets by 2040, to achieve balance in 2050 has to reduce consumption by 0.8% per year.

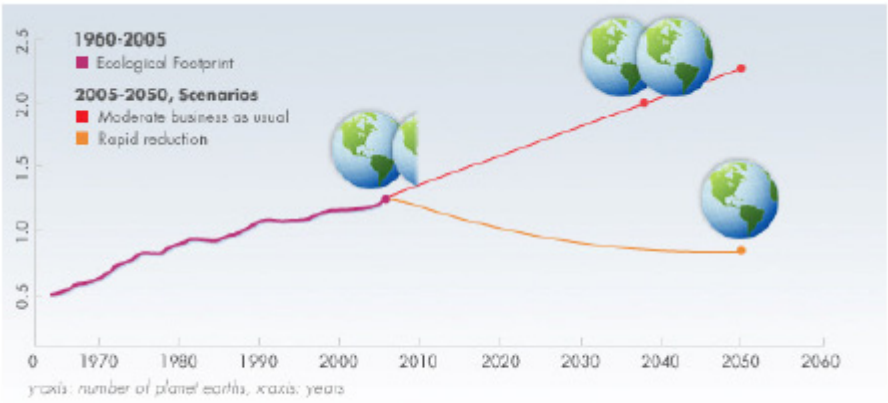

Source: ecologicalfootprint (2011)

Figure 2: Actions for Conservation and Cost Reduction

In Brazil, during the last 15 years, the energy-efficiency scenario has been going through a lot of changes. These have been caused mainly by the creation of agencies, programs, and laws, with the intention of regulating, inspecting, and stimulating the activities at all levels. The perspectives for the energy sector deserve further study, because we still do not have a regulatory framework that meets the expectations of the private sector, creating public–private partnership, and thus the required investments for the sector (Cardoso *et al.* 2010).

3 Methods and Models

In industries, energy efficiency can be applied from observations of some systemic savings opportunities, which, when analyzed, may indicate lower costs for the industries.

3.1 Analysis of Energy Efficiency Stages

- Energy Audit → reveals opportunities
- Energy Diagnosis → measures the opportunity
- Energy Committee → implementation of schedule, energy management, training, and internal audits
- Action Implementation → performing opportunities

3.2 Topics of Energy Efficiency

- Engines with low financial gain, poorly scaled, or operating at low load;
- Electrical inadequacy;
- Thermal losses in cooling system and air conditioning;
- Thermal losses in boilers, heating systems, furnaces, kilns, etc.
- Losses in compressed air system;
- Losses in pumping systems and fluid distribution;
- Wasteful lighting – bulbs, fixtures, and automation;
- Inefficient maintenance of mechanical systems;
- Joule effect losses in substations, panels, and electric cables;
- Lack of management of energy inputs and contracts with concessionaires;
- Lack of a control system of production efficiency;
- Lack of focus in the energy systems of process automation;
- Loading of transformers.

All the aforementioned items are directly related to the process of verifying energy-efficiency conditions in the industrial environment. Figure 3 shows a schedule of topics in energy management:

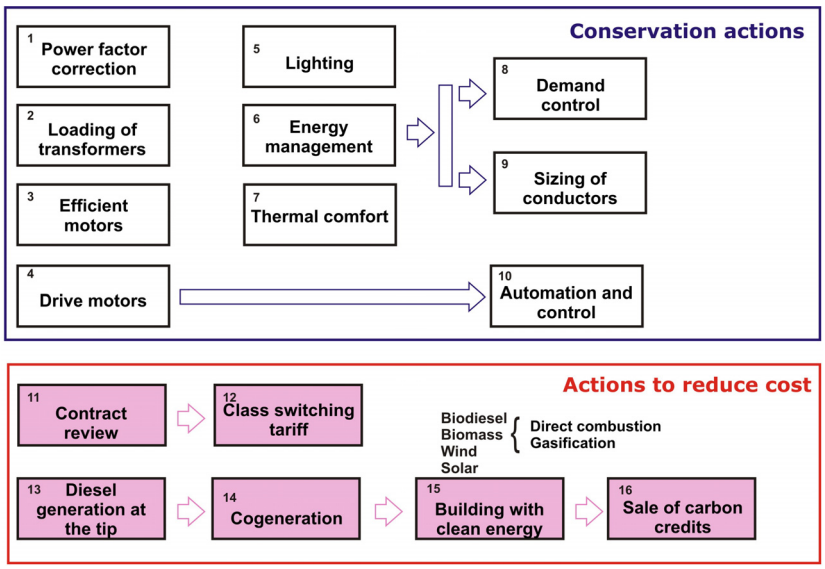

Figure 3: Diagram of Actions for Conservation and Cost Reduction

4 Case Studies and Industry Application: Analysis and Discussions

To endorse the proposed methodology, three case studies of eco-efficiency energy applied in industries have been presented. These cases were studied and researched by the Production and Energy Research Group of the Federal University of Paraiba and applied in industries in Northeast Brazil.

4.1 Study of a Cooling Tower in Paper Industry

Some industrial processes, particularly chemical and biological exothermic processes, require proper cooling, obtained with the use of heat exchangers and transportation of heat to the environment. The cooling tower is the most commonly used equipment for that purpose, and its functional scheme is shown in Figure 4.

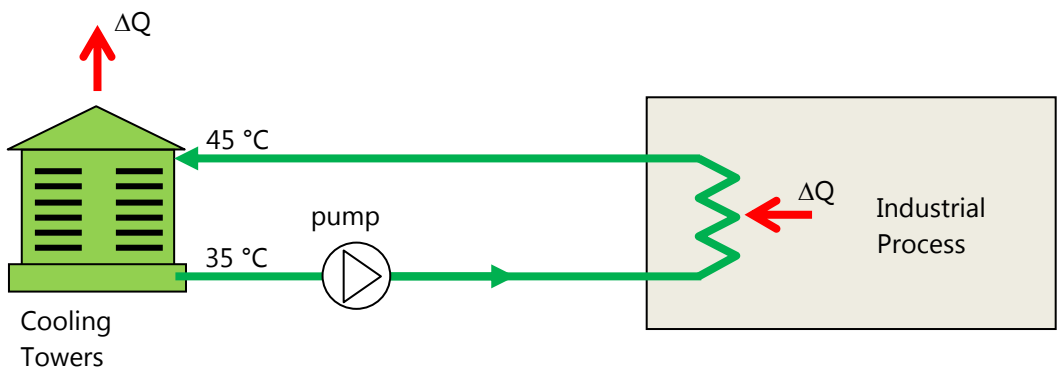

Source: Own elaboration

Figure 4 – Cooling system based on towers

In the cooling tower, we have two refrigerants:

- Cold water is pumped to a heat exchanger within the process, removing heat ΔQ and raising the water temperature when returning to the top of the tower.

- Atmospheric air is blown over the water curtain formed inside the tower through a fan at the top of the tower, removing the heat from water and transferring it back to the environment.

In this example, the returned water can reach a maximum temperature of 45ºC, and the tower has been designed for a differential temperature of 10°C. The designed temperature considered for cold-water injection into the heat exchanger process is 35ºC.

As previously stated, a fan installed on top of the tower forces the air to circulate inside it, leaving through the small side windows. The air absorbs part of the injected water in the form of steam at the top of the tower, and the latent heat of water evaporation cools the remaining water, thus removing heat from the process and carrying it to the atmosphere.

Each tower is built for maximum environmental conditions in the place where it will be installed. Taking the example of a city in Northeast Brazil, the average temperature varies from month to month according to the series represented in Figure 5.

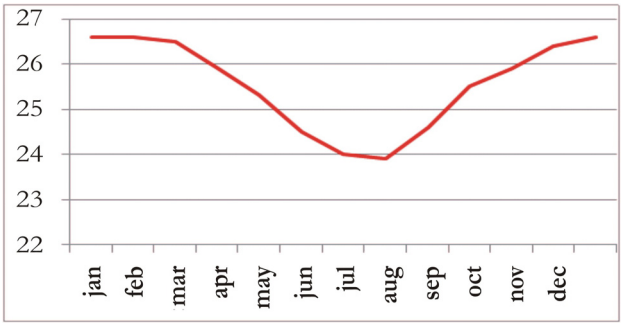

Source: Own elaboration

Figure 5: Average temperature (°C) variation at an industrial city over a year

Integrating the values over the years, we obtained an average change of 1.12°C. One can vary the flow of the two refrigerants (air or water) by considering that the tower was designed for a differential temperature of 10°C and that due to fall in temperature, it can work at 11.12°C without disrupting the process. In the analyzed case, we have the following situation:

- Engine water pump → 30 HP
- Fan motor tower → 60 HP

The variation curve of power consumption in relation to the flow of a centrifugal pump and the fan is shown in Figure 6.

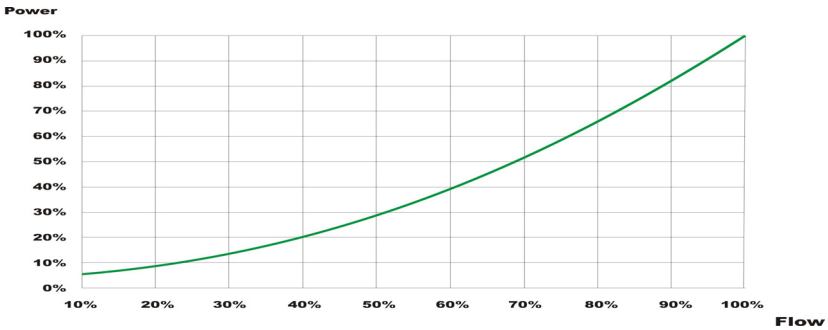

Source: Own elaboration

Figure 6: Power consumed by the engine as a function of pump flow

To *not* consider system thermal losses when reducing the air flow will be proportional to the increase in temperature gradient, because:

$\Delta Q/\Delta t = v_{water} \cdot c_{water} \cdot \Delta T_{water} = v_{air} \cdot c_{air} \cdot \Delta T_{air}$

$v_{air} = (\Delta Q/\Delta t) / (c_{air} \cdot \Delta T_{air})$

As heat is always removed from the process at the same rate, we will have

$v_{air} \cdot c_{air} \cdot 10 = v'_{air} \cdot c_{air} \cdot 11.125$

$v'_{air} = v_{air} \cdot (10/11.125) = 0.899$

To simplify the calculations as it is an estimate, by considering that the engine power variation is quadratic with the flow, we can obtain an average consumption throughout the year of approximately.

$P' = P \cdot (0.899)2 = 0.81$

This shows a saving of 19% when compared with an operation with constant rotation. To implement the solution, a frequency converter operating in a closed loop was introduced, which regulated the engine speed fan according to the temperature of the return water, whose set point is the nominal value designed for the tower, which is 45°C. After implementation, measurements were carried out during a week of operation, in two different situations.

- A week with inverter operating at a fixed frequency of 60 Hz;
- A week with temperature control loop return water by controlling the inverter frequency.

The second situation presented a 63% reduction in electricity consumed by the cooling tower, when compared with the first situation. This result has far surpassed the expectations due to the following two factors not considered in this study:

- The environment temperature varies over a day, but is substantially lower during the night;
- The process itself varies, reducing the demand for heat exchange along a production run, due to several factors, such as unplanned downtime, stops to machine "set up", and product changes.

4.2 Atomizer (Drying Tower) in a Cleaning-Material Industry

The atomizer is a cylindrical tower with two cones, one on the top and one on the bottom. The bottom cone is elongated, and its shape encourages the flow of the final product, a powder that has two basic specifications that must be kept under control: humidity and granulation. The functional scheme of an atomizer is shown in Figure 7.

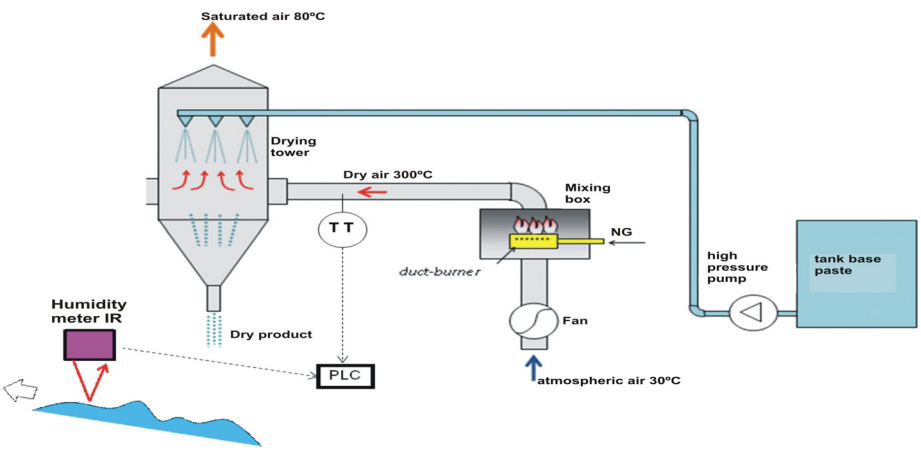

Source: Own elaboration

Figure 7: Functional scheme of an Atomizer

Hot gases are produced in a box mix by burning natural gas in a burner, such as "duct-burner," which has a wide range of uses and can operate with high excess air. Excess of atmospheric air is blown onto the burned air through a fan, producing dry air, thus warming the flow and making the temperature suitable for drying the product. This mass of hot air is injected into the central tower in an upward flow. The product to be dried is a paste of high viscosity, which is pumped at high pressure (approximately 50 bar) through the nozzles and sprayed inside the tower in a downward flow to form droplets of controlled size, which, once dried, form a granular powder, the final product of this stage of the manufacturing process.

Between hot-air entry and spray-up area (atomized), the product is dried by vaporization of water contained in the folder. From the standpoint of power, before the intervention to increase energy efficiency, control of air flow to the box mix is achieved by throttling the suction "damper," which causes a high pressure drop between the repression and the suction fan, with high energy consumption. The moisture content of the final product is measured in samples per hour, which causes a large fluctuation in the quality of the final product.

The intervention basically consists of introducing a variable frequency drive, which is a device that has the purpose of controlling the engine speed, maintaining constant torque, not causing changes in the engine speed while it is under load, to drive the fan, and removal of "damper." The suction duct needs a major bottleneck for obtaining proper air flow, and the measured power in the engine is 44 kW, or 80% of the nominal power, as shown in Figure 8. However, when operating with frequency converter, the rotation falls to 55% (33 Hz), yielding the same air flow. Thus, the power reduces to 13.3 kW, or 24.2% of the nominal power, resulting in considerable saving of electric power.

From the thermal standpoint, a continuous humidity meter of the final product, of infrared technology, and free of contact has been introduced into the process. The control system is equipped with a PLC (Programmable Logic Controller) and a mathematical model of the atomizer has been developed, tested, and validated. The PLC control algorithm adjusts the air flow and natural gas in the burner, "duct-burner," according to the mathematical model to obtain the desired humidity set-point with minimal consumption of thermal energy. Figure 8 shows the flow curve and load before (strangulation) and after (variable speed) intervention.

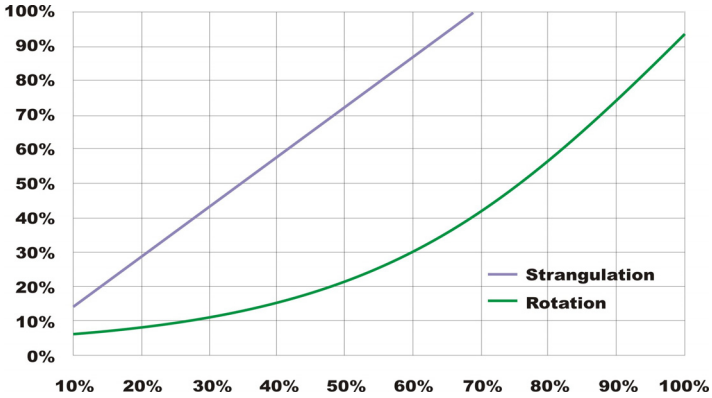

Source: Own elaboration

Figure 8: Flow Curve and Load (%) in the atomizer

As a result, we can save a significant quantity of raw materials, according to the repeatability in the humidity of the final product. In Tables 1, 2 and 3 some of the measured and validated results are presented. In Tables 2 and 3, one can observe a significant reduction of 69.7% and 7.5% on electricity and heat, respectively, contributing to a decrease in the cost of approximately US$ 120000/year.

Table 1: Raw materials results

Raw Materials		Before	After
Monthly production (final product)	t/month	6500	6500
Humidity	%	3.5%	5.5%
Water content	t/month	228	358
Raw materials	t/month	6273	6143
Economy of raw materials	t/month	130	
	%	2.1%	

Source: Own elaboration

Table 2: Achievements in Electric Energy

Electric Energy		Before	After
Load on the fan	kW	44	13.3
Fan consumption	kWh/month	22000	6655
Electricity cost	US$/kWh	0.19	0.19
Electric Energy saving	kWh/month	15345	
	%	69.7%	
	US$/year	35216.8	

Source: Own elaboration

Table 3: Results obtained in Thermal Energy

Thermal Energy		Before	After
Paste humidity	%	30%	30%
Water content	t/month	2688	2633
Evaporated water	t/month	2461	2275
Thermal power	Mcal/month	1326325	1226225
PCI of Natural Gas	Mcal/m^3	8.5	8.5
Natural Gas consumption	m^3/month	156038	144262
Natural Gas cost	US$/m^3	0.6	0.6
Thermal energy saving	Mcal/month	100100	
	%	7.5%	
Natural Gas economy	m^3/year	141318	
	US$/year	84790.6	

Source: Own elaboration

4.3 Production Process in Soap Bar Industry

The manufacturing process of soap bar is basically molding of the dough and forming a continuous bar, driven by a duo of rollers. After the formation of the bar, a knife (cutter) synchronized with the die plate performs cross-sections, in which the repetition interval is adjusted depending on the final product size, as shown in Figure 9.

During field surveys in preparation for the energy-efficiency study, there were two problems on the production line:

- After the cut, during packing, there were periods of overcrowding packer, and the die plate and the engine were kept at the same speed, which caused the problem of overlapping parts and which needed a large area for temporary storage of the bars already cut;
- During the launch of the line, the amount of loss was due to substantial wrong cuts owing to lack of synchronism between the die plate and the cutter as the joint accelerated. Later, all these waste materials were reprocessed, returning to a machine, which increased energy consumption in the line (kWh/t).

The proposed and implemented intervention was the introduction of a frequency inverter for variable speed drive motor wire drawing, as shown in Figure 9.

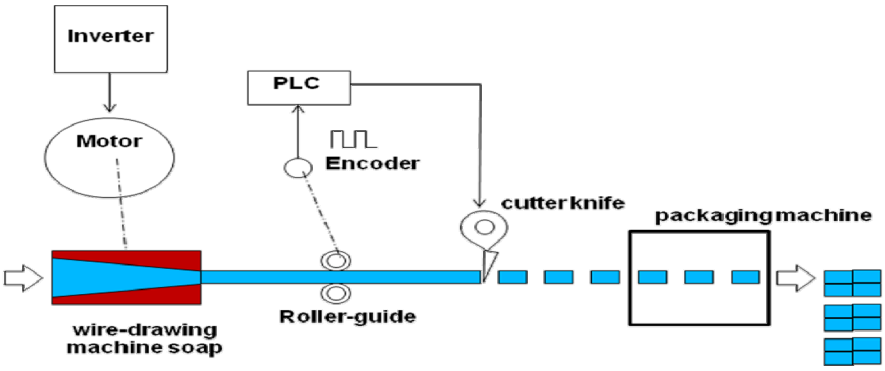

Source: Own elaboration

Figure 9 – Scheme of production manufacturing of soap bar

Besides saving the electrical energy through the vector drive and the engine that delivers only the power required to overcome the resistive torque of the load, we obtained an extraordinary reduction in noncompliance losses. The reduction in the waste material offered a reduction in energy consumption of the production line.

5 Conclusion

The use of this methodology would lead to the following outcomes:

- Methodological Guide with a script to perform an analysis of energy efficiency in industries;
- There was a reduction until 63% e 69% in the electric energy in studies cases presented;
- Actions for simulation of demand management and the consequent results in carbon credits as well as in the production of electricity and natural gas;.
- Industrial diagnosis technique of energy-efficiency to identify points of energy losses.
- Need for the identification of equipment replacement and acquisition of energy data, and their influence on energy management.

References

Cullen, J. M.; Allwood, J. M. (2010). Theoretical efficiency limits for energy conversion devices, Energy Review, Volume 35, Issue 5, May, pp. 2059-2069.

Ecologiaclfootprint (2011), Disponible in: http://www.ecologicalfootprint.com/

Granderson, J.; Piette, M A.; Ghatikar, G. (2010). Building energy information systems: user case studies, Energy Efficiency Review, doi 10.1007/s12053-010-9084-4.

Hammond, G. P. (2007). Industrial energy analysis, thermodynamics and sustainability, Applied Energy, Volume 84, Issues 7-8, July-August, pp 675-700.

Hasanbeigi, A.; Price, L.; Lu, H.; Lan, W. (2010). Analysis of energy-efficiency opportunities for the cement industry in Shandong Province, China: A case study of 16 cement plants, Energy Review, Volume 35, Issue 8, August, pp 3461-3473.

Inee. (2001). Instituto Nacional de Eficiência Energética, Energy Efficiency and Energy New Industry Model (in Portuguese), Rio de Janeiro, Brazil.

Januzzi, G. M. (2000). Policies for Energy Efficiency and Renewable Energy Market in the New Context: An Analysis of Recent Experience in the U.S. and Brazil (in Portuguese), Campinas: FAPESP. Brazil.

Jochem, E.; Gruber, E. (2007). Local learning-networks on energy efficiency in industry – Successful initiative in Germany, Applied Energy, Volume 84, Issues 7-8, July-August, pp 806-816.

Kirschen, M.; Risonarta, V.; Pfeifer, H. (2009). Energy efficiency and the influence of gas burners to the energy related carbon dioxide emissions of electric arc furnaces in steel industry, Energy Review, Volume 34, September, pp 1065-1072.

Laurijssen, J.; De Gram, F. J.; Worrell, E.; Faaij, A. (2010). Optimizing the energy efficiency of conventional multi-cylinder dryers in the paper industry, Energy Review, Volume 35, Issue 9, pp 3738-3750.

Mamede Filho, J. (2008). Energy saving in Industry and Commerce (in Portuguese). Revista Mundo Elétrico, São Paulo, n. 344, jun, pp. 51-55. Brazil.

Martins, M.P.S. (2001). Concrete in Belem do Para: A Vision Analytics Components, Hand-to-Work and Pathologies (in Portuguese), MSc Dissertation, Universidade da Amazônia, Brazil.

Oliveira, M. (2008). Composite materials containing gypsum, EVA (ethylene vinyl acetate) and vermiculite: optimization of formulations and thermomechanical properties (in Portuguese), Dr. Thesis, Federal University of Paraiba, Brazil.

Panesi, A. Q. (2006).Fundamentals of Energy Efficiency (in Portuguese), São Paulo: Ensino Profissional. Brazil.

Péres, A.; Deschamps, E.;Silva, C.R.C. (2009). Energy Efficiency in Industries (in Portuguese), In: VIII CBQEE – Conferência Brasileira sobre Qualidade de Energia Elétrica, Blumenal-SC. Brazil.

Reis, L.; Cunha, E. C. N. (2006). Electrical Energy and Sustainability: Social and environmental Aspects of Technological and Laws Aspects (in Portuguese), São Paulo: Manole. Brazil.

Siitonen, S.; Tuomaala, M.; Suominen, M.; Ahtila, P. (2010). Implications of process energy efficiency improvements for primary energy consumption and CO2 emissions at the national level, Applied Energy, Volume 87, Issue 9, September, pp 2928-2937. doi:10.1016/j.apenergy.2009.09.024

Vine, E.; Prahl, R.; Meyers, S.; Turiell, I. (2010). An Approach for evaluating the market effects of energy efficiency programs, Energy Efficiency Review.
doi: 10.1007/s12053-009-9070-x.