The current issue and full text archive of this journal is available on Emerald Insight at:
https://www.emerald.com/insight/1463-7154.htm

Business Process Management Journal

Hospital operations management – characterising patients' process flows in emergency departments

Rui M. Lima and Erik Teixeira Lopes
Department of Production and Systems, Algoritmi Research Centre/LASI, School of Engineering, University of Minho, Guimarães, Portugal
Derek Chaves Lopes
School of Health Sciences (ESCS), Brasília, Brazil
Bruno S. Gonçalves
Department of Mechanical Engineering, Polytechnic University of Leiria, Leiria, Portugal, and
Pedro G. Cunha
School of Medicine, Life and Health Science Research Institute (ICVS), University of Minho, Braga, Portugal; Unidade Local de Saúde do Alto Ave, Guimarães, Portugal and ICVS/3B's – PT Government Associate Laboratory, Guimarães, Portugal

Received 19 August 2023
Revised 2 March 2024
11 May 2024
Accepted 25 May 2024

Abstract

Purpose – This work aims to integrate the concepts generated by a systematic literature review on patient flows in emergency departments (ED) to serve as a basis for developing a generic process model for ED.

Design/methodology/approach – A systematic literature review was conducted using PRISMA guidelines, considering Lean Healthcare interventions describing ED patients' flows. The initial search found 141 articles and 18 were included in the systematic analysis. The literature analysis served as the basis for developing a generic process model for ED.

Findings – ED processes have been represented using different notations, such as value stream mapping and workflows. The main alternatives for starting events are arrival by ambulance or walk-in. The Manchester Triage Scale (MTS) was the most common protocol referred to in the literature. The most common end events are admission to a hospital, transfer to other facilities or admission to an ambulatory care system. The literature analysis allowed the development of a generic process model for emergency departments. Nevertheless, considering that several factors influence the process of an emergency department, such as pathologies, infrastructure, available teams and local regulations, modelling alternatives and challenges in each step of the process should be analysed according to the local context.

Originality/value – A generic business process model was developed using BPMN that can be used by practitioners and researchers to reduce the effort in the initial stages of design or improvement projects. Moreover, it's a first step toward the development of generalizable and replicable solutions for emergency departments.

Keywords Emergency department, BPMN, Lean healthcare, Patient flows, Hospital operations management

Paper type Literature review

© Rui M. Lima, Erik Teixeira Lopes, Derek Chaves Lopes, Bruno S. Gonçalves and Pedro G. Cunha. Published by Emerald Publishing Limited. This article is published under the Creative Commons Attribution (CC BY 4.0) licence. Anyone may reproduce, distribute, translate and create derivative works of this article (for both commercial and non-commercial purposes), subject to full attribution to the original publication and authors. The full terms of this licence may be seen at http://creativecommons.org/licences/by/4.0/legalcode

This work was partially supported by FCT – Fundação para a Ciência e Tecnologia within the R&D Units Project Scope UIDB/00319/2020.

Disclosure statement: No potential conflict of interest was reported by the author(s).

Business Process Management Journal
Emerald Publishing Limited
1463-7154
DOI 10.1108/BPMJ-08-2023-0632

1. Introduction

Hospital operations management aims at strategically allocating resources to treat patients efficiently and effectively. This is a heavily complex and variable type of service, delivered with the cooperation of a multitude of highly technical resources and skilled professionals, responding to an ever-increasing volume of highly variable demand (Figueroa *et al.*, 2019). Lean Healthcare principles have been applied to hospital operations management (Dobrzykowski *et al.*, 2016) to increase efficiency, reduce waste and improve patient outcomes by focusing on the value delivered to patients and continuously improving healthcare processes (Ferreira *et al.*, 2018). One hospital service deserving higher attention in Lean Healthcare publications is the Emergency Department, or ED (Lima *et al.*, 2021). This is simultaneously one of the most complex health services due to the human risky activities with high-priority patients and the very large number of process alternatives, procedures and pathologies, and one with a high impact on the patient's well-being, service cost and resource utilization (Morganti *et al.*, 2013).

Value is the most important aspect of the application of Lean in Healthcare services and may be interpreted as any activity or process that directly contributes to meeting patient needs and expectations. Lean healthcare applied to the ED focuses on analysing and improving the entire patient experience with the lower level of waste possible, from the moment they enter the ED to the moment they exit, including all processes, systems and stakeholders involved. In this context, it is important to develop activities of process modelling (Neuner *et al.*, 2021), waste identification (Lisiecka-Bielanowicz and Lisiecka, 2020), value stream analysis (Le *et al.*, 2022), visual management (Mangum *et al.*, 2021) and continuous improvement (Denicolo *et al.*, 2021). It should also be considered that several other aspects of the entire hospital operation have a direct impact in the ED delivery of care, and that overcrowding of ED is a major contributor to reduction of efficient and timely clinical care (Kelen *et al.*, 2021; Yarmohammadian *et al.*, 2017). It should also be underlined that the organization of the Health System by country is very heterogeneous, and that this is largely contributing to the difficulty of the systematic analysis of outcomes achieved by several different interventions.

Several strategies have been pinpointed as possible contributors to the overall reduction of the impact that overcrowding inflicts in the ED operation (Maninchedda *et al.*, 2023). Process modeling may be seen as the initial step for any improvement project as it allows creating an initial starting view of the process (Gabryelczyk *et al.*, 2022). By creating such process models, healthcare organizations can analyse various inputs, outputs, steps, decision points and handoffs. In this way, it is possible to identify which activities are value-added and which are not (De Ramón Fernández *et al.*, 2020), allowing to focus on activities that directly contribute to improving patient outcomes and eliminating those that do not. Furthermore, patient flows are complex and multidimensional, involving patients' conditions, and organizational and institutional variables, requiring complex interventions (Gualandi *et al.*, 2019). These challenges are directly related to patient satisfaction (Al Owad *et al.*, 2022) and an effective and efficient patient flow enhances access to health services and enables resources required to provide quality care (Manning and Islam, 2023; Tlapa *et al.*, 2020). Moreover, important patient flow metrics such as waiting time and length of stay are related to accessibility and efficiency improvements in health services (Tlapa *et al.*, 2020). Additionally, process models may be used to run simulations, identify bottlenecks and overloaded resources and test potential changes to the process, allowing the evaluation of the impact of different scenarios of improvement (Zhao *et al.*, 2015). Process modeling in Lean healthcare uses in most cases value stream mapping approaches (Lima *et al.*, 2021). Nevertheless, there are other approaches for process modelling, such as business process modelling and notation (BPMN) approaches (Aissaoui *et al.*, 2022), flowcharts (Castanheira-Pinto *et al.*, 2021) and some hybrid approaches (Bal *et al.*, 2017).

Although there are diverse authors that present process models of emergency departments in hospitals, with different objectives of process improvement and using

different techniques, such as discrete simulation, it was not possible to find a generic model that could be used as a starting point for new projects of improvement. In this sense, Günal and Pidd (2010) emphasized the specificity and limited reuse of simulation models in healthcare. Despite the increasing number of publications, the literature still lacks flexible systems adaptable to various layouts, scenarios and operational needs (Ouda *et al.*, 2023). In this context, a generic business process can serve as a foundational step towards developing more complex and generalizable models. Thus, considering the limitation of existing literature, the current work aims to answer the following research questions:

RQ1. What are the main process modelling approaches used in hospital emergency departments in lean healthcare interventions? What are the main indicators and results obtained?

RQ2. Is it possible to derive a generic business process model that may be used and adapted to most of the ED patient flows?

A systematic literature review (SLR) was conducted to answer these questions. The discussion of the main results of the SLR crossed with the researchers' experience, both in hospital operations management and medical assistance, allowed to identify the main commonalities and most of the important special cases, which were modelled using a BPMN approach. In this way, the second research question was answered for the studies included in the SLR.

In summary, the main contributions of this research are the identification of the main approaches of process modelling in Lean healthcare that can be used by practitioners to make informed decisions on the modelling approaches they should use. Moreover, a generic model for process modelling of emergency departments is derived and may be used both by researchers and practitioners when designing, analysing and improving ED solutions.

2. Materials and methods

This work presents a systematic literature review on process mapping and patient flows in emergency departments (ED) using the PRISMA guidelines (Page *et al.*, 2021). Moreover, the findings of the SLR informed, together with the researchers' interdisciplinary expertise, the deduction of a generic process model for ED.

The selection of articles was done through a search on Scopus and Web of Science (WoS) databases using the following keywords to find lean healthcare journal publications in English, filtered for title, abstract, or keywords:

(1) ((“lean health care” OR “lean healthcare” OR “lean hospital*”) OR (((“lean thinking” OR “lean management” OR “lean production” OR “Toyota production system” OR “Toyota Kata”) AND (hospital* OR healthcare OR “health care”))))

Additionally, three combinations of this search term were crossed (“and”) with terms to find works related to process modelling, discrete event simulation and value stream mapping. Thus, the following queries were constructed using a combination of the previous search “and” the following terms, filtered for title, abstract, or keywords:

(1) (“process* model*” OR “process* map*”)

(2) (“discrete event simulation” OR “discrete simulation”)

(3) (“value stream map”)

Next, using the snowball technique (Noy, 2008), other papers were selected related to emergency department and hospital operations management not included by the search engine. For both strategies, inclusion criteria were full articles written in English, and

published in journals, that described processes in the ED, regardless of the country and publication year. Documents that were not related to healthcare, carried out in other areas of the hospital than ED, or that did not characterize the process were excluded.

The titles and abstracts of the articles were evaluated by two independent researchers, and in case of disagreement, a third researcher was consulted. After the initial selection, the same strategy was used to analyse full texts. In each selected document, the year and country of publication, proposed methodology, service characteristics, suggested or implemented improvements, tools used, type of process model presented, flow and events represented were analysed.

The flowcharts were analysed for graphic elements and text descriptions and synthesized into a table. As most of the articles were case studies without quantitative evaluation and heterogeneous, to avoid the risk of bias no meta-analysis of the results was performed.

Finally, the interdisciplinary team of researchers discussed the results, and identified the main events, activities and sequences, to propose a standard ED process model for patients' flow. This process model reflects the selected studies derived from a comprehensive search process. This process model can be used in other contexts to design, analyse and improve ED operations.

3. Descriptive results of the SLR

The systematic literature review returned 141 articles from the databases' search. Of these, 69 were results of the first query presented in the methodology (51 in the Scopus database and 18 in the WoS database), 23 were from the second query (10 in Scopus and 13 in WoS) and 49 were from the third query used (28 in Scopus and 21 in WoS). Duplicate articles were then identified and removed (41). Of the remaining 97 articles, 3 were removed as they were not related to healthcare: one related to Lean Construction, one presented a framework for validating Lean Manufacturing tools, and the last discussed the use of Lean Thinking in academic libraries. Of the 94 remaining articles, researchers did not have access to the full text of 6, resulting in a total of 88. The researchers analysed these 88 articles in their entirety and classified the area of the hospital where the studies were conducted, as suggested by Lima *et al.* (2021). In the end, 13 studies conducted in emergency departments met the criteria defined in the methodology and for that reason were selected and fully analysed. Finally, using the snowball technique, 5 additional articles were added as the researchers understood that they presented characteristics in the flowcharts that complemented results and discussion, totalling 18 articles for the present study. Figure 1 presents the flow diagram used in this systematic review.

As the exclusion criteria did not consider a time frame, the obtained articles span a range of 20 years, with the oldest from 2003 (Solberg *et al.*, 2003) and the most recent from 2022 (de Barros *et al.*, 2022; Le *et al.*, 2022). Also, the studies were conducted in a wide variety of countries. Both characteristics contribute to the objective of identifying a generalizable pattern for different contexts. Regarding the representations used, 13 articles used workflow, 7 used VSM and 3 used cause-and-effect diagrams. Other representations, such as frameworks, were used in smaller quantities. All articles presented activities related to care flows (patient care), but Aaronson *et al.* (2017) also represented and discussed a flow related to the Accounts Office.

Among the ED studied by the authors, most of them are hospital emergency departments, without defining subareas. However, some articles focus on activities for specific contexts related to pathologies or medical specialities, which require different approaches and activities, such as psychiatry and stroke emergencies (Alexander *et al.*, 2020; dos Santos Leandro *et al.*, 2021).

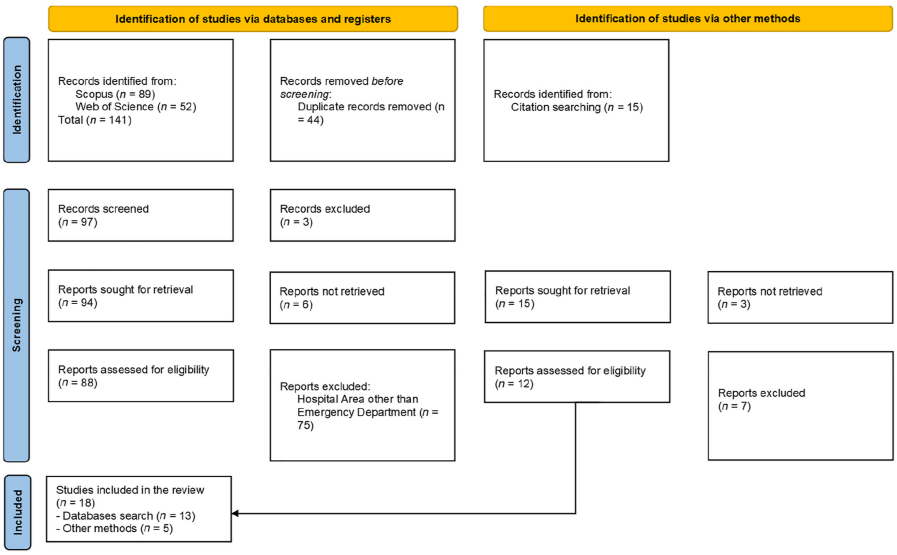

Figure 1. Systematic literature review flow diagram according to the Prisma methodology

Of the 18 studies included, five do not clearly characterize the hospital in which the study was conducted. The articles that characterize hospitals present different indicators, such as the supported population, number of patients treated, number of beds, or team size. Table 1 summarizes the following characteristics of the articles analysed: Country where the study was developed, Hospital Information, Process model representation, Patient Arrival events, Triage Protocol and End Events.

Analysing the characteristics of the presented process flows, it is possible to identify a lack of standardization in modelling language, graphical elements used and nomenclature. From the point of view of layouts, some of the authors choose to represent only the performed activities in the flows, with the location inferred through the activity or resource, while others explicitly show the rooms in the maps. Human resources or departments involved are also frequently represented but usually associated with the name of the activity rather than as a lane in the flowchart, along with goals for service time (Back *et al.*, 2017). The use of colours and different geometric shapes to represent the flow is also noted, often without legend. In the case of articles that adopted VSM, the main information represented is similar and somehow standardized, identifying the activities, the time spent and the involved resources.

Emergency departments are characterized by high and spontaneous demands, with patient arrival being one of the determining attributes to characterize the process. However, most articles do not represent the different ways patients arrive. In articles that specify this information, there are two main options: walk-in and ambulance, which are associated with changes in the flowchart and subsequent activity priority. dos Santos Leandro *et al.* (2021) also differentiates the use of public or private ambulances, given their influence on arrival time, which is important in the analysed context of stroke.

Besides medical care, triage is the most common activity in the flowcharts, being displayed in all articles except for one (Ryan *et al.*, 2013). Various protocols are used, including Canadian Triage and Acuity Scale (CTAS), Manchester Triage Scale (MTS), Australasian Triage Scale (ATS) and other unspecified protocols. Other activities represented are patient admission to the ED, complementary diagnostic exams executed, consultation with specialists, medication administration and medical re-evaluation. Furthermore, decision

Article	Country	Hospital information	Process representation	Patient arrival	Triage protocol	End events
Alowad *et al.* (2021)	Saudi Arabia	Tertiary Hospital	Workflow, VSM	Ambulance, Walk-in	5 levels, protocol not specified	Bed admission, ED discharge
dos Santos Leandro *et al.* (2021)	Brazil	Uses a database, not a service	Workflow	Ambulance (SAMU), Private ambulance, Car	Protocol not specified	Discharge Ranking
Alexander *et al.* (2020)	Ireland	Tertiary hospital	Workflow	Ambulance, Other Hospital	Protocol not specified	Discharge, Admission to the local unit, Admission to a remote unit
Al Owad *et al.* (2018)	Saudi Arabia	Tertiary Hospital	Workflow	Ambulance, Walk-in	5 levels, protocol not specified	Bed admission, ED discharge, Admission discharge
Aaronson *et al.* (2017)	Ghana	Tertiary Hospital	Workflow	General – not specified	Protocol not specified	Discharge, Admission
Cookson *et al.* (2011)	UK	Not identified	VSM	Ambulance	Protocol not specified	The patient enters the queue for medical assessment
King *et al.* (2006)	Australia	Tertiary Hospital	Workflow, VSM	–	Australasian Triage Scale	–
Castanheira-Pinto *et al.* (2021)	Portugal	Not identified	Workflow	General – not specified	Manchester	Medical discharge
Gabriel *et al.* (2020)	Canada	Tertiary Hospital	Workflow	Ambulance, Walk-in	Canadian Triage Acuity Scale (CTAS)	Discharge, Short stay unit area
Bal *et al.* (2017)	Turkey	Tertiary Hospital	VSM	General – not specified	5 levels, local protocol	Tally out
de Barros *et al.* (2022)	Brazil	Not identified	VSM	General – not specified	Manchester	Discharge
Le *et al.* (2022)	Vietnam	Not identified	Workflow, VSM	Ambulance, Walk-in	Manchester	Operation, Vascular intervention, Transfer
Ryan *et al.* (2013)	Ireland	Not identified	VSM	General – not specified	–	Wait for bed
De Freitas *et al.* (2020)	Trinidad and Tobago	Not identified	Workflow	General – not specified	Canadian Triage Acuity Scale (CTAS)	Discharge, Admit to ward, Wait in ED to review

Table 1.
Overview of the analysed articles

(*continued*)

Article	Country	Hospital information	Process representation	Patient arrival	Triage protocol	End events
Back *et al.* (2017)	UK	Several hospitals	Workflow	Ambulance, Walk-in	Protocol not specified	Send elsewhere, Discharge patient, Admit patient
Kang *et al.* (2014)	USA	Several large hospitals	Workflow	General – not specified	Protocol not specified	Patient discharged
Hummel *et al.* (2010)	USA	Several emergency departments	Workflow	General – not specified	Protocol not specified	Disposition
Solberg *et al.* (2003)	–	–	Workflow	Emergency care, Unscheduled urgent care, Safety net care	Protocol not specified	Admit to hospital, Transfer to other facility, Ambulatory care system, ED boarding of inpatients

Table 1.

points, or gateways, are important in characterizing the flow and altering the sequence of activities. In this context, some articles considered risk classification, medical referrals and shift time.

The departures from the emergency department may include different outcomes, such as discharge, hospital admission, referral to another health service and referral for surgery. None of the articles considered patient death in the flowchart, and only one article (Solberg *et al.*, 2003) considered the patient leaving without complete treatment.

The complexity of emergency department processes and their relationship with other hospital areas and healthcare services is evidenced by authors in analysed documents. For example, De Freitas *et al.* (2020) represent an end-to-end emergency process that considers many decision points not found in other studies, such as material availability, team availability and shifts. The authors also present related subprocesses, highlighting the relationship with other departments.

Alowad *et al.* (2021) combined the understanding of the process, patients' and staff's perceptions to suggest improvements in the flowchart. Among them, the authors propose to merge the admission and patient registration activities, collect data automatically and update hospital systems. King *et al.* (2006) suggest triaging patients only between those who need emergency care or not, serving non-emergencies on a first-come, first-served basis. Among the suggested improvements are layout changes, visual communication, team hiring, activity changes, merging resources' activities (Castanheira-Pinto *et al.*, 2021; Aaronson *et al.*, 2017; Gabriel *et al.*, 2020; Cookson *et al.*, 2011; Bal *et al.*, 2017; de Barros *et al.*, 2022; Le *et al.*, 2022; Ryan *et al.*, 2013).

Regarding the relationship with other departments, Al Owad *et al.* (2018) represents activities related to hospital admission, such as searching for available beds and patient transport. Kang *et al.* (2014) provide an analysis of admission policies, using simulations to demonstrate their impact on decision-making time and emergency department crowding.

The interference of pathologies or specialties becomes evident in some articles. dos Santos Leandro *et al.* (2021) use process mining to show changes before and during COVID-19 in

events related to stroke, where time to treatment is a major factor. Alexander *et al.* (2020) discuss specific steps for the care of psychiatric patients in ED, requiring the involvement of specialists, psychiatric screening, activation of security teams and follow-up after transfer. In the case of Hummel *et al.* (2010), the authors discuss a different admission process, including activities to identify the medications that the patient is taking, to expedite and provide more safety in the medication reconciliation process, reducing the length of stay in the ED. Castanheira-Pinto *et al.* (2021) treat different pathologies with different time distributions determined from the historic hospital data, thus being able to deal with different processing times, number of medical consultations and complementary treatments and exams.

Finally, Solberg *et al.* (2003) analyse with experts possible measures for emergency departments, presenting 38 final indicators that can be used as tools to monitor and improve the processes of this department, while Back *et al.* (2017) discuss existing escalation policies in the NHS and their ability to improve service in cases of overcrowding, finding differences between what was expected and what is done in moments of pressure on the ED.

Several papers have presented metrics to characterize their context, including the number of beds, total patients per period, resource availability and time metrics, for example. These are important for understanding the methodology and validating the studies. Table 2 summarizes the main results of each paper and, when available, the metrics associated with them.

4. Generic process model for emergency departments

This study aimed to analyse the literature on emergency department flows, identifying main modelling approaches, characteristics considered and obtained results. Also, a generic ED patients' flow process was proposed, that can be adapted to different contexts. While articles tend to converge on some activities and events, such as triage, this work considers other specific aspects, highlighting the complexity in emergency departments. As an example, although the ED outcome related to "death" was not found in the reviewed process models, it was included in the generic ED process. Thus, a generic process flow for emergency departments using the ISO standard language BPMN is proposed in this section, condensing the main findings of this systematic review, and extrapolating them according to other sources of knowledge, including the empirical experience of the research team. To facilitate the discussion and organization of the document, Figure 2 (all BPMN models were developed with Bizagi ®) is presented at the beginning of this section and will be discussed in detail throughout the section.

4.1 Process milestone 1 – admission and triage

In general, the analysed studies that differentiate the inputs of the process propose two possibilities for patients arriving at the emergency department: walk-in, in which the patient seeks the service by self-admission; and ambulance, where the admission is made via ambulance transportation, usually due to pre-hospital care (PHC).

The next activity of the flowchart usually is patient admission, with the opening of the medical record, which is a step that can be reduced or performed by third parties, especially in cases of seriously ill patients. In this situation, it is common to transport patients to the stabilization room after they arrive at the ED, while a professional from the transportation service fills in the information to admit the person. Several reviewed articles (Alowad *et al.*, 2021; Back *et al.*, 2017; De Freitas *et al.*, 2020; Gabriel *et al.*, 2020; Al Owad *et al.*, 2018) propose this option. Admission may also contain specific activities depending on the observed pathology (Alexander *et al.*, 2020) or the objective of the care (Hummel *et al.*, 2010). Patients with specific pathologies that have time-sensitive evaluation and interventions, can be

Article	Results	Metrics associated with results
Alowad *et al.* (2021)	The study emphasizes the significant impact of prolonged waiting times in the Emergency Department (ED) on service quality. It suggests that integrating lean tools with the Voice of Customer (VOC) and Voice of Process (VOP) perspectives can improve patient flow, satisfaction and ED capacity	Cycle time Waiting Time
dos Santos Leandro *et al.* (2021)	The primary findings of the study included worsening health status of patients upon hospital admission, reduced duration of hospitalization, extended delay in receiving reperfusion therapies after hospital admission, and a preference for referral hospitals over emergency services	Hospitalization duration Timestamps (first symptoms, request for help, hospital admission, reperfusion therapies) mRS score at hospital discharge
Alexander *et al.* (2020)	The key results indicate a reduction in the length of stay for psychiatric patients in the Emergency Department (median difference: 1 h, $p = 0.015$) and achievement of qualitative goals	Length of stay Attainment of Goals
Al Owad *et al.* (2018)	The study identified significant areas of waste affecting patient flow in the Emergency Department (ED) and offered recommendations to establish a lean process flow by addressing the root causes of overcrowding and waste in EDs	Length of Stay Waiting time Timestamps
Aaronson *et al.* (2017)	The authors concluded that process mapping is a cost-effective, low-tech activity that is beneficial in low-resource environments	Unspecified
Cookson *et al.* (2011)	The authors identified over 300 instances of waste and potential process improvements in their department. They found that Lean Thinking offers significant potential in waste identification and Value Stream improvements, ultimately enhancing the quality of care in the emergency department. Their case study demonstrated a mean reduction of 20 min from Emergency Department arrival to initial nurse assessment	Time between arrival to initial nurse assessment
King *et al.* (2006)	Streamlining significantly reduced waiting times and overall durations of stay in the ED. Waiting times became more consistent across all patient groups, and overall, patients spent significantly less time in the department. Additionally, the average number of patients in the ED at any given time decreased. Moreover, there was a notable decrease in the number of patients who did not wait and a slight reduction in access block	Waiting times % of patients meeting ATS protocol waiting times Total duration of stay Time to see the doctor Number of patients who died Number of patients in the ED

(*continued*)

Table 2. Results and metrics associated

Article	Results	Metrics associated with results
Castanheira-Pinto *et al.* (2021)	The authors devised and validated a model for the ED department, exploring several scenario variants to optimize its design	Waiting time Average number of patients waiting for the first medical observation Average waiting time for the first medical observation Medical staff occupation Room capacity
Gabriel *et al.* (2020)	The ED initially struggled to meet demand, with only 17.2% of patients receiving full treatment and an average Length of Stay (LOS) of 2213.7 min. However, after adjusting decision variables and applying Lean techniques, the percentage of treated patients increased to 95.7%, and the average LOS decreased to 461.2 min. The time from triage to attention also notably decreased from 404.3 min to 20.8 min, while the transfer time from bed to the Specialized Support Unit (SSU) decreased by 60.0%	% of patients treated Length of Stay Time to be attended after triage Time to transport the patient to SSU
Bal *et al.* (2017)	The future state map of the triage process was updated with suggestions and proposed changes, resulting in the implementation of five active process changes aimed at reducing lead and value-added times. These changes varied in their impact on time reduction. The utilization of lean techniques proved effective in decreasing patient lead and value-added times within the ED. Furthermore, when integrated with discrete event simulation modeling, the potential outcomes of these lean techniques could be tested and validated	Value-added time Lead time Staff utilization rates
de Barros *et al.* (2022)	Value Stream Maps were generated, and process times were computed, leading to the identification of wastes and their underlying causes, culminating in the development of 13 maps. The average process time between activities varied from 7.3 to 114.0 min, interruption time ranged from 0 to 27.6 min, waiting time spanned from 43.2 to 507.5 min, and lead time extended from 56.6 to 638.0 min. Causes of waste encompassed high patient demand and shortages of personnel and facilities	Process Time Waiting Time Interruption Time Lead Time Value-added

Table 2. (*continued*)

Article	Results	Metrics associated with results
Le *et al.* (2022)	Through the implementation of a lean approach, substantial reductions in delay and waiting time were observed across different procedures: pre-operative test result delays decreased by 33.3%, vascular interventions saw a reduction of 10.4%, and admission to other hospital departments experienced a decline of 49.5%. Satisfaction with ED services, which stood at 22.9% before lean implementation, rose to 76.5% following the elimination of non-value-added activities	Delays Waiting Time Patient satisfaction
Ryan *et al.* (2013)	Significant delays were detected through significance tests, and bottlenecks were assessed using lean thinking value-stream mapping and the five focusing steps of the theory of constraints. Logistic regression analysis showed that patients undergoing radiological tests, blood tests and admission were 4.4, 4.1 and 7.7 times more likely, respectively, to surpass four hours in the ED compared to those who did not. Noteworthy delays were observed in waiting for radiology, waiting for the in-patient team, waiting for a bed, and ED doctor turnaround time	Waiting times Turnaround time Length of stay
De Freitas *et al.* (2020)	Six overarching categories impacting ED patient flow were recognized, encompassing ED organizational work processes, design and layout, material resources, nursing staff levels and roles, non-clinical ED staff, and external clinical and non-clinical departments. Each category contained specific factors that either facilitated or impeded patient flow. Furthermore, a conceptual framework illustrating the factors influencing ED patient flow is outlined	Unspecified
Back *et al.* (2017)	The analysis of National Health Service escalation policies indicates that successful implementation hinges on the ability to flexibly adjust resources, modify workflows and transfer patients. However, in practice, these conditions are not always feasible during periods of high pressure in the emergency department (ED). As a result, informal adaptations of escalation processes are made to manage the pressures. This adaptive approach, referred to as "work as done," highlights a misalignment between the intended policy ("work as imagined") and its actual implementation	Unspecified

(*continued*)

Table 2.

Article	Results	Metrics associated with results
Kang *et al.* (2014)	Compared to the current admission process policy, all alternative approaches demonstrated effectiveness in decreasing the length of stay for admitted patients by 14%–26%. This translates to an average reduction of 1.4–2.5 h in the time patients spend in the ED before being admitted to internal medicine under the new admission process policy. Additionally, the improved flow of admitted patients resulted in a reduction of up to 5% in the ED length of stay for discharged patients and up to 6.4% in the overall length of stay	Length of Stay Waiting times
Hummel *et al.* (2010)	The authors propose several strategies to optimize the workflow for generating a medication list in the emergency department. These include engaging patients in medication information collection, leveraging clerical staff, identifying patients with incomplete information and focusing solely on essential medication details for clinical decision-making purposes	Unspecified
Solberg *et al.* (2003)	The initial set of 113 measures, spanning input, throughput and output categories, underwent iterative revision and rating, resulting in a reduction to 38 measures. These final measures exhibited notable variation in ratings across different categories, depending on the addressed concept. While offering a valuable resource for emergency departments (EDs) and policymakers in tackling ED crowding, these measures necessitate thorough testing for feasibility, reliability and value	Examples Patient Volume ED throughput time ED bed placement time ED occupancy rate ED admission transfer rate Hospital occupancy rate

Table 2.

allocated to dedicated pathways in the ED that have systematic diagnostic and treatment procedures (Stroke, Acute Miocardial Infarction, Trauma, Sepsis). These pathways may not be implemented in all EDs, but in general, a network of referral units that offer this specific treatments are well identified amongst the public and Emergency First Responders.

Another point that must be considered after the patient's admission is the medical specialty to which he will be directed. Many services separate the care locations into at least four major areas, such as Adult Medical Clinic; General Surgery; Paediatrics; Gynaecology and Obstetrics. Although this is under explored in other papers, we consider that such information is important for both the patient and the development of internal flows. From a spatial point of view, the proximity of resources usually employed in certain areas to the care location must be considered, as well as the clear distinction of these for the user with visual signals (Aaronson *et al.*, 2017; Bal *et al.*, 2017), avoiding the patient from leaving his flow. Wang *et al.* (2015) also analysed the use of cell layouts, as used in industries, to increase productivity in emergency departments, showing the impact of space organization on efficiency.

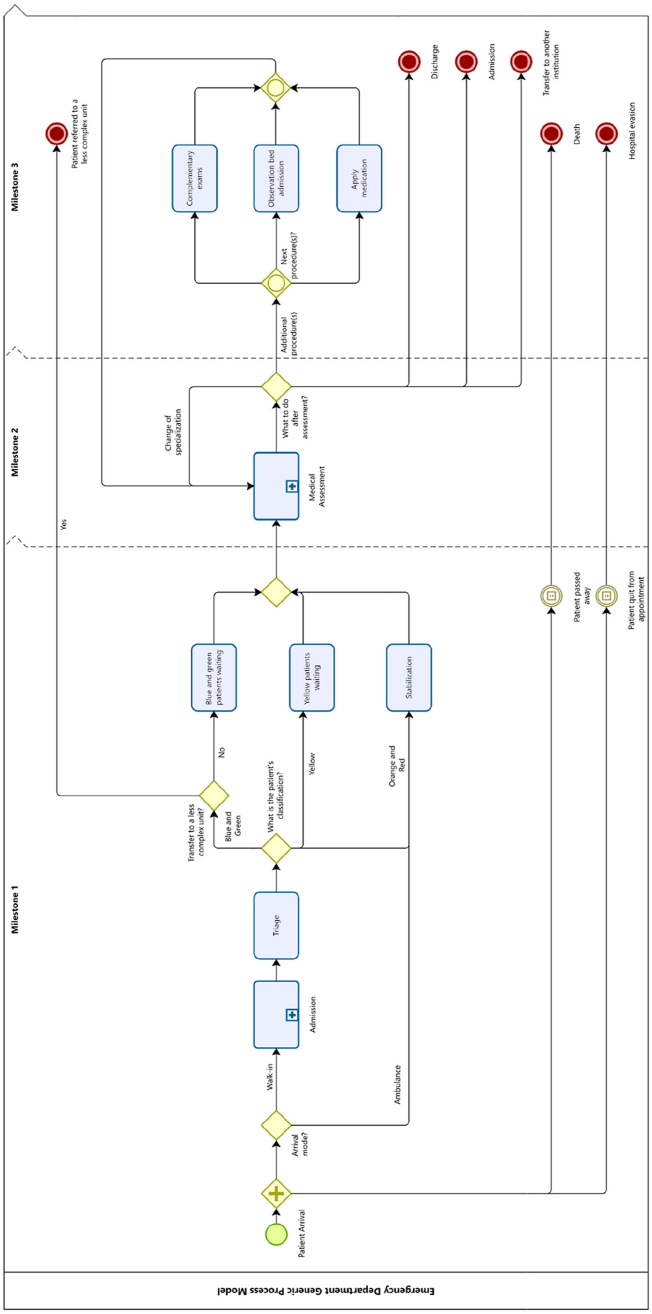

Figure 2.
Emergency department generic process model

Almost all articles propose risk classification triage, mostly through 5-level scales, such as the MTS. This is a validated scale for the emergency department that seeks to separate patients based on vital signs and simple information into levels of urgency, proposing limited waiting times (Azeredo *et al.*, 2015). In the ED, such division is essential, especially in times of limited resources. In addition, risk classification can distinguish waiting areas and professional teams responsible for the patient (Castanheira-Pinto *et al.*, 2021; De Freitas *et al.*, 2020). Severe ill patients (orange or red) can be led directly to the stabilization room or emergency box, being under the specific care of teams previously defined for this environment (Alowad *et al.*, 2021; Back *et al.*, 2017; De Freitas *et al.*, 2020).

Finally, a modelling approach was also used with parallel gateways and conditional events to represent the possibility of the patient passing away or dying at any point during the process. In this scenario, since the end events are of the terminate type, the process is terminated if any of these conditions occur.

4.2 Process milestone 2 – medical assessment

Once admitted and triaged, all articles refer a patient evaluation stage by a healthcare professional. After this stage, most of them demonstrate other activities carried out: complementary exams (whether laboratory or imaging), medication, or observation bed hospitalization, still in the ED. In our process, we do not specify the resource, as we understand that there are significant differences in the availability of equipment among institutions and that the process itself is nearly the same. We represent this subsequent stage of care as an inclusive gateway, meaning that the same patient may require one or more of the activities and they are not excluding. In the case study by Dosi *et al.* (2021), the authors identified that 81% of patients required at least one complementary exam after medical evaluation.

Few articles include the return to the healthcare professional after collecting exams or medication. This is an important stage, as it requires personnel, organization of the schedule, and waiting time for the patient, who remains in the service until discharge, a fact that some simulation models consider (Guo *et al.*, 2016). We considered that all patients must be re-evaluated after drug administration. Usually, patients are monitored after the administration of medication and its clinical improvement (or failure to) should be recorded as a support tool for discharge, observation or admission. It should also be noted that this stage (return to healthcare professional) is mandatory after the execution of complementary exams that must be evaluated and taken into consideration in the decision-making process.

dos Santos Leandro *et al.* (2021) and Alexander *et al.* (2020) specifically deal with flows in specialized emergencies. In these situations, specific resources may be necessary, as presented by Alexander *et al.* (2020). However, even in services where the initial care is provided by the emergency professional, evaluation by a specialist may be necessary, whether through in-hospital consultation, on-call, or teleconsultation (Van Der Linden *et al.*, 2023). Thus, we included Figure 3, which demonstrates the subprocess of medical assessment, characterizing the flow regarding the patient return, specialist involvement and their main activities.

Finally, a diagnosis of a particular pathology may be primarily clinical and not require additional testing, based on a clinical history and physical exam (Sackett and Rennie, 1992). Therefore, we have included in our proposal the option for immediate discharge after the consultation. During this initial assessment, it may still be determined that hospitalization or specialized support from resources not available at the hospital is needed, requiring transfer to another institution.

4.3 Process milestone 3 – treatment and outcomes

Most articles consider three patient outcomes from the emergency department: discharge, hospitalization and transfer. However, this work also considers the possibilities of patient

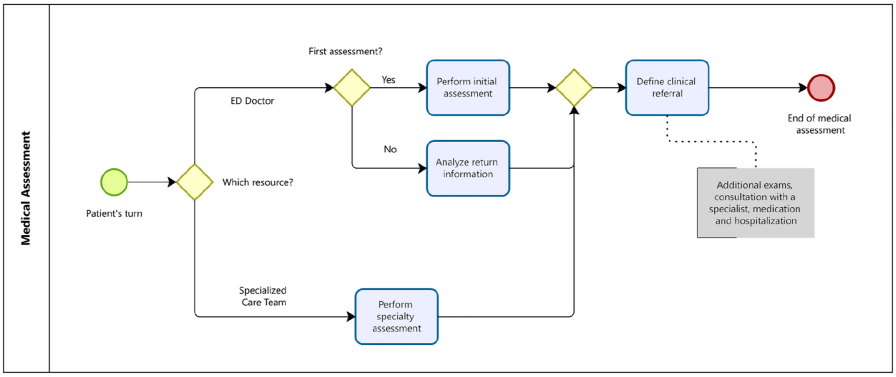

Figure 3. Subprocess medical assessment

evasion and death, as well as the triage redirection. Death and evasion may occur at any stage of the process (Carter *et al.*, 2014), and should be considered in the analysis of ED processes and simulations. These different outputs were specified to represent connections with other hospital areas. This also allows for counting the number of patients who pass through each outcome and enables future models from different departments to connect to the ED. Some patients are admitted in extreme situations, in which medical intervention cannot reverse the evolution to death; it is also necessary to consider that acute situations in patients with multiple comorbidities (including age and human frailty) are conducive to rapid clinical degradation and sudden events that lead to death despite timely clinical intervention. Marco *et al.* (2021) identified delays in healthcare and failure to meet patient expectations as the main reasons for patients leaving without being seen or finishing treatment. Additionally, factors such as symptom severity and age seem to be related (Kennedy *et al.*, 2008). In the ED generic process modelling, a parallel gateway and a conditional intermediate event is used for both situations, followed by a terminate end event. It allows us to consider these situations at any time during the process and, if they happen, the process is ended.

Finally, it is important to consider the execution of complementary exams and the time spent waiting for the results. This is also one of the major bottlenecks of the operation as typically the ED relies on imaging and evaluation of biological specimens (blood, urine and others collected after medical evaluation) that are executed in other departments usually having their own constraints, and many often becoming overwhelmed by the ED demand (Ryan *et al.*, 2013).

4.4 Specific cases

The following specific cases of ED patients' flow will be described below: specific protocols and staff availability.

4.4.1 Specific protocols. In medical literature, some comorbidities have well-established guidelines with time targets for care and intervention that lead to better clinical outcomes. Examples include patients with acute coronary syndrome and stroke (Collet *et al.*, 2021; Powers *et al.*, 2019). The use of standardized clinical pathways is a strategy that can help combat emergency department overcrowding (Savioli *et al.*, 2022). In such cases, it is essential that the service, including human and logistical resources, is prepared to prioritize and optimize care through "green pathways" (Soares-Oliveira and Araújo, 2014). In these cases, the prioritization of the sequencing of activities and allocated resources may change. Therefore, the workflow proposed in this study must be adapted according to local guidelines.

Furthermore, some studies address specific flows for medication reconciliation (Hummel *et al.*, 2010) or specialties (Alexander *et al.*, 2020; dos Santos Leandro *et al.*, 2021). These particularities should be studied, but in most cases, they are specific initiatives of the service, difficult to be generalized to other units.

For both cases, there are alternative modelling options based on the proposed mapping. One option is to insert gateways into the flowchart that validate whether the patient fits into specific cases, directing them to a different flow with other activities. If there are specific stages within one of the already represented activities, it is possible to transform them into subprocesses and detail them, similarly to what was adopted in the "Medical assessment" activity. For example, in the case of medication reconciliation, the admission activity could be detailed as a subprocess that validates whether it is an admission for reconciliation and, in such cases, executes activities that the patient needs to perform. Figure 4 illustrates this modelling alternative, using activities proposed by Hummel *et al.* (2010).

4.4.2 Staff availability. The availability of the healthcare team is one of the factors that may influence the process and response time in the emergency department (Savioli *et al.*, 2022). In some specialties, it is common to have on-call schedules, where the physician is not on-site and is only called if necessary. However, van der Linden *et al.* (2019) obtained promising results by allocating specialists on-site during peak hours, and the value of this initiative was recognized by both the specialists and the ED teams. Clear protocols regarding early activation of the team and travel time must be provided for this purpose.

Additionally, there may be shifts during which the ED team is reduced. In some hospitals, steps may be eliminated during night-time shifts, changing the previously described process (De Freitas *et al.*, 2020). For example, after admission, the patient may be directed to wait in a single area with first-come, first-served service. However, the professional who receives this patient should pay attention to any potential priorities and high-risk patients to prioritize those in greater need if necessary. If required, this situation can be represented in the process by using a gateway to validate the availability of the team.

One last point that may raise questions is the lack of representation of stakeholders in each activity. In the context of the model presented, this would add complexity to understanding and visualisation, as some activities may be carried out by different roles. For example, "Complementary Exams" are performed by both doctors and nurses or technicians. Therefore, the decision was made to omit the representation of lanes, but other researchers may add them in their adaptations of the presented model.

5. Discussion

This section compares and discusses alternatives to patients' flow considering additional literature related to emergency departments. Considering the objectives of this work, this

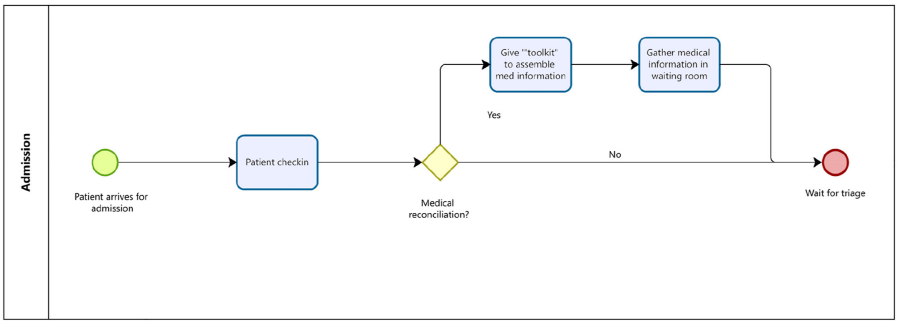

Figure 4.
Example of admission as a subprocess

section is organized according to the following sections: process representation options and languages; milestones of the ED generic process; study limitations.

5.1 Process representation

Among the analysed studies there is a predominance of flowchart representations, possibly due to the flexibility of this artefact. However, as a reflection of this flexibility, there is a wide variation in representations regarding the standardization of elements, which creates a difficulty of interpretation and comparison between studies. VSM is one of the most used lean tools in healthcare contexts and has been recurrently explored in the literature (Lima *et al.*, 2021). These studies show more commonalities in the type of representation, following the pattern suggested by traditional references, such as that proposed by Rother and Shook (1999).

In this work, BPMN (Business Process Model Notation) is used as the process mapping approach, which is a standard recognized for its expressiveness representing processes of different complexities and for easiness of understanding (Chinosi and Trombetta, 2012). Additionally, BPMN best practices have been recognised (Pufahl *et al.*, 2022) to overcome some challenges in modelling healthcare processes. In addition to activities and decisions, several authors represent the location used, probably due to its impact on hospital overcrowding and patient allocation. For that, it is suggested the use of comments or lanes to represent hospital departments and physical structure. The same applies to equipment and human resources since the BPMN model allows this flexibility in modelling. Waiting, which was identified in the flowcharts and VSMs of the analysed articles, is one of the wastes of Lean healthcare (Bharsakade *et al.*, 2021), and its representation may be important in improvement project contexts. In this case, intermediate "time events" can be added to the process, if the waiting time is predetermined, or if this associated with a specific physical space it may be modelled as an activity. Otherwise, waiting is a result of the process conditions and available resources, and if it is important to represent it can be explicitly identified in a comment.

5.2 Admission and triage

Over the years, the emergency department has gained an important role in admitting patients who are hospitalized. Factors related to this include the availability of equipment and teams with high diagnostic capacity and easy access outside of business hours and weekends (Morganti *et al.*, 2013). In addition, it is possible that in places with lower staff availability, part of the ED acts in the care of unstable patients in wards, composing a rapid or a code response team (White *et al.*, 2015). These factors can increase the unit's workload and lead to incidents (Concord Medical Emergency Team Incidents Study Investigators *et al.*, 2014), although other articles have shown that they are not the main delay point in the department (Lindner and Woitok, 2021; Savioli *et al.*, 2022).

To reduce time, King *et al.* (2006) suggest a simplified triage, differentiating only high-risk patients (orange and red) for immediate care and attending to others on a first-come, first-served basis. Other literature approaches suggest triage by doctors, anticipating the request for exams and reducing the door-to-doctor time, but still lack more robust cost-effectiveness analyses (Joseph and White, 2020). These authors also highlight the possibility of using telemedicine to enable this alternative process.

The proposed generic ED process groups patients into three categories based on the Manchester triage scale, according to the characteristics of the resources that will be allocated. However, other triage scales can be modelled by adding or reducing the number of gateway sequences. Chen *et al.* (2020) developed a simulation model to improve the allocation

of medical staff and meet the targets of triage scales, highlighting the various constraints in the emergency process that increase the complexity of the model.

During the initial contact with the emergency department (ED), patients at low risk (usually triaged in the blue or green category) can be directed to seek care in lower complexity units or at the ambulatory level, depending on the context of the healthcare system (Joseph and White, 2020). In these cases, in addition to the referral to the other service, it is essential to explain to the patient the reason for this redirection. This measure can prevent overload in the emergency department with cases that do not require urgent care at the time of evaluation, as well as improve follow-up in treatment (Doran *et al.*, 2013).

5.3 Medical assessment

The medical assessment process is quite complex and with a myriad of alternatives. It is highly dependent on pathologies, organizational culture and decisions made by high specialized professionals. Moreover, during medical re-assessment, policies to avoid prescription errors are necessary, including evaluation of adverse effects (Billstein-Leber *et al.*, 2018). Back *et al.* (2017) discussed the existing escalation policies in the National Health Service in England (NHS), showing that often, due to urgency and pressure on the healthcare system, the team's activities differ from the planned ones.

5.4 Treatment and outcomes

Although most studies consider hospitalization as a single outcome, the internal management of these patients may need to be discussed. Kang *et al.* (2014) and Al Owad *et al.* (2018) discuss the process of in-unit hospitalization, including steps such as contacting the nursing ward, verifying bed availability, and internal transfer. While not included in our generalization proposal because they are activities performed outside of the ED, these aspects should be considered if they impact the time the patient will remain in the ED, as factors that delay ED discharge are some of the main causes of ED overcrowding (Savioli *et al.*, 2022). Additionally, depending on the complexity and clinical severity, patient transport may require a physician's presence, consuming ED resources (Kulshrestha and Singh, 2016). Furthermore, some emergency departments have beds for short-term hospitalization, keeping the patient under observation. Di Somma *et al.* (2015) emphasize that ED boarding is one of the main causes of overcrowding, reinforcing the need for solutions for this stage.

Patient bed allocation is one of the major challenges of hospital management, considering constraints such as infrastructure and costs, and it is necessary to decide which patients can be admitted, which can wait, and which can be referred to other services (Wang *et al.*, 2020). The possibility of patient transfer was discussed in some articles (Alexander *et al.*, 2020; Le *et al.*, 2022; Solberg *et al.*, 2003). Again, it is necessary to evaluate the flows of each unit regarding transportation to determine which professionals will be responsible for this process. Here, in the case of patient flow simulations, it is important to characterize the transportation, which is a gap highlighted in several works. Hospital infrastructure, medical staff, coordination mechanisms, transportation and safety and infection control are some of the criteria that influence the decision-making for a transfer process (Essoussi *et al.*, 2023).

Additionally, De Freitas *et al.* (2020) considered the possibility of risk reclassification. Typically, few studies consider this, and since the patient has already been assessed in their initial classification, we understand that this stage would have little practical impact on process modelling. However, some services adopt a consecutive and repeated strategy of Reassessment of Clinical Risk or Re-Screening of patients awaiting medical evaluation, when their waiting time exceeds that recommended by the protocol used. This allows early identification of patients who, after being triaged with less urgent priorities, presented clinical degradation during their stay in the ED and should therefore be evaluated as a priority –

reducing the risk of adverse events. If the reassessment of clinical risk is a hospital policy, it can be modelled using timer intermediate conditional events according to the triage protocol and former classification, redirecting the flow to the triage activity.

5.5 Study limitations

As with all systematic literature reviews, the findings described reflect the focus and limitations of the previously published works, as well as potential biases of the search mechanism. To avoid this, broad queries were used, in addition to using more than one database. Furthermore, snowballing was used to complement the evaluation of the available literature.

Despite proposing a generic process flow, it does not apply to all contexts as referred to above, given the enormous complexity and variability of emergency units among hospitals and countries. Nevertheless, several possibilities were discussed, and the presented map can serve as a starting point for most of them, undergoing eventual adaptations according to the local reality.

6. Conclusion

Hospital operations management seeks to find effective ways to improve the service of healthcare organizations and increase the value generated for patients. Among the existing departments, the emergency department stands out in terms of opportunities and investigations due to its complexity and relevance. Understanding the process is one of the initial factors for improvement projects and system modelling, which motivated this systematic literature review (SLR). The SLR results allowed to identify start and end events, decision-making factors, and other elements necessary to understand the reality of emergency department patients' process flows.

Based on the results of the SLR, the researchers' empirical experience, and extrapolation with other literature references, a standard process model was proposed to represent the patient flow in the emergency department. In addition, using the BPMN standard notation, the representation is divided into three milestones to facilitate understanding and interpretation. Two types of patient arrivals are considered, ambulance and walk-in, and six exits: discharge, hospitalization, referral or transfer to another institution, death and hospital evasion. The most relevant activities were also considered, with an emphasis on triage with risk classification, medical assessment, either by the on-duty physician or by specialists called in, and the necessary treatments.

Several factors influence the process of an emergency department, such as pathologies, infrastructure, available teams and local regulations. Although a standard process cannot cover all options, some of the alternatives were discussed in this article. Thus, seeking to reduce this limitation and facilitate the use of the proposed model, alternative modelling options were suggested.

The research contributes to knowledge and practice, allowing organizations to start from a model for understanding their processes. It also facilitates the discussion of health processes for professionals who do not have much experience in this context, such as software developers. Furthermore, the standardization of main activities can facilitate the development of replicable models for simulations, adapting only to the specific characteristics of the context.

Finally, it is suggested that this process model can be adopted and validated with case studies in different hospitals to verify its accuracy in representing patient flows. It is also suggested that similar studies be conducted for other hospital areas, given the gain of starting from standardized processes in improvement and simulation projects.

References

Aaronson, E., Mort, E. and Soghoian, S. (2017), "Mapping the process of emergency care at a teaching hospital in Ghana", *Healthcare*, Vol. 5 No. 4, pp. 214-220, doi: 10.1016/j.hjdsi.2016.12.001.

Aissaoui, N.O., Ben Mbarek, H., Layeb, S.B. and Hadj-Alouane, A.B. (2022), "A BPMN-VSM based process analysis to improve the efficiency of multidisciplinary outpatient clinics", *Production Planning and Control*, Vol. 35 No. 5, pp. 1-31, doi: 10.1080/09537287.2022.2098199.

Al Owad, A., Samaranayake, P., Karim, A. and Ahsan, K.B. (2018), "An integrated lean methodology for improving patient flow in an emergency department–case study of a Saudi Arabian hospital", *Production Planning and Control*, Vol. 29 No. 13, pp. 1058-1081, doi: 10.1080/09537287.2018.1511870.

Al Owad, A., Islam, M., Samaranayake, P. and Karim, A. (2022), "Relationships between patient flow problems, health care services, and patient satisfaction: an empirical investigation of the emergency department", *Business Process Management Journal*, Vol. 28 No. 3, pp. 684-712, doi: 10.1108/BPMJ-11-2020-0523.

Alexander, L., Moore, S., Salter, N. and Douglas, L. (2020), "Lean management in a liaison psychiatry department: implementation, benefits and pitfalls", *BJPsych Bulletin*, Vol. 44 No. 1, pp. 18-25, doi: 10.1192/bjb.2019.64.

Alowad, A., Samaranayake, P., Ahsan, K., Alidrisi, H. and Karim, A. (2021), "Enhancing patient flow in emergency department (ED) using lean strategies–an integrated voice of customer and voice of process perspective", *Business Process Management Journal*, Vol. 27 No. 1, pp. 75-105, doi: 10.1108/BPMJ-11-2019-0457.

Azeredo, T.R.M., Guedes, H.M., Rebelo de Almeida, R.A., Chianca, T.C.M. and Martins, J.C.A. (2015), "Efficacy of the manchester triage system: a systematic review", *International Emergency Nursing*, Vol. 23 No. 2, pp. 47-52, doi: 10.1016/j.ienj.2014.06.001.

Back, J., Ross, A.J., Duncan, M.D., Jaye, P., Henderson, K. and Anderson, J.E. (2017), "Emergency department escalation in theory and practice: a mixed-methods study using a model of organizational resilience", *Annals of Emergency Medicine*, Vol. 70 No. 5, pp. 659-671, doi: 10.1016/j.annemergmed.2017.04.032.

Bal, A., Ceylan, C. and Taçoğlu, C. (2017), "Using value stream mapping and discrete event simulation to improve efficiency of emergency departments", *International Journal of Healthcare Management*, Vol. 10 No. 3, pp. 196-206, doi: 10.1080/20479700.2017.1304323.

Bharsakade, R.S., Acharya, P., Ganapathy, L. and Tiwari, M.K. (2021), "A lean approach to healthcare management using multi criteria decision making", *OPSEARCH*, Vol. 58 No. 3, pp. 610-635, doi: 10.1007/s12597-020-00490-5.

Billstein-Leber, M., Carrillo, C.J.D., Cassano, A.T., Moline, K. and Robertson, J.J. (2018), "ASHP guidelines on preventing medication errors in hospitals", *American Journal of Health-System Pharmacy*, Vol. 75 No. 19, pp. 1493-1517, doi: 10.2146/ajhp170811.

Carter, E.J., Pouch, S.M. and Larson, E.L. (2014), "The relationship between emergency department crowding and patient outcomes: a systematic review", *Journal of Nursing Scholarship*, Vol. 46 No. 2, pp. 106-115, doi: 10.1111/jnu.12055.

Castanheira-Pinto, A., Gonçalves, B.S., Lima, R.M. and Dinis-Carvalho, J. (2021), "Modeling, assessment and design of an emergency department of a public hospital through discrete-event simulation", *Applied Sciences (Switzerland)*, Vol. 11 No. 2, pp. 1-25, doi: 10.3390/app11020805.

Chen, W., Guo, H. and Tsui, K.-L. (2020), "A new medical staff allocation via simulation optimisation for an emergency department in Hong Kong", *International Journal of Production Research*, Vol. 58 No. 19, pp. 6004-6023, doi: 10.1080/00207543.2019.1665201.

Chinosi, M. and Trombetta, A. (2012), "BPMN: an introduction to the standard", *Computer Standards and Interfaces*, Vol. 34 No. 1, pp. 124-134, doi: 10.1016/j.csi.2011.06.002.

Collet, J.-P., Thiele, H., Barbato, E., Barthélémy, O., Bauersachs, J., Bhatt, D.L., Dendale, P., Dorobantu, M., Edvardsen, T., Folliguet, T., Gale, C.P., Gilard, M., Jobs, A., Jüni, P., Lambrinou, E., Lewis,

B.S., Mehilli, J., Meliga, E., Merkely, B., Mueller, C., Roffi, M., Rutten, F.H., Sibbing, D., Siontis, G.C.M., Kastrati, A., Mamas, M.A., Aboyans, V., Angiolillo, D.J., Bueno, H., Bugiardini, R., Byrne, R.A., Castelletti, S., Chieffo, A., Cornelissen, V., Crea, F., Delgado, V., Drexel, H., Gierlotka, M., Halvorsen, S., Haugaa, K.H., Jankowska, E.A., Katus, H.A., Kinnaird, T., Kluin, J., Kunadian, V., Landmesser, U., Leclercq, C., Lettino, M., Meinila, L., Mylotte, D., Ndrepepa, G., Omerovic, E., Pedretti, R.F.E., Petersen, S.E., Petronio, A.S., Pontone, G., Popescu, B.A., Potpara, T., Ray, K.K., Luciano, F., Richter, D.J., Shlyakhto, E., Simpson, I.A., Sousa-Uva, M., Storey, R.F., Touyz, R.M., Valgimigli, M., Vranckx, P., Yeh, R.W., Barthélémy, O., Bhatt, D.L., Dorobantu, M., Edvardsen, T., Folliguet, T., Gale, C.P., Gilard, M., Jobs, A., Jüni, P., Lambrinou, E., Lewis, B.S., Mehilli, J., Meliga, E., Merkely, B., Mueller, C., Roffi, M., Rutten, F.H., Sibbing, D. and Siontis, G.C.M. (2021), "2020 ESC guidelines for the management of acute coronary syndromes in patients presenting without persistent ST-segment elevation", *European Heart Journal*, Vol. 42 No. 14, pp. 1289-1367, doi: 10.1093/eurheartj/ehaa575.

Concord Medical Emergency Team (MET) Incidents Study Investigators, Cheung, W., Sahai, V., Mann-Farrar, J., Skylas, K., Uy, J. and Doyle, B. (2014), "Incidents resulting from staff leaving normal duties to attend medical emergency team calls", *Medical Journal of Australia*, Vol. 201 No. 9, pp. 528-531, doi: 10.5694/mja14.00647.

Cookson, D., Read, C., Mukherjee, P. and Cooke, M. (2011), "Improving the quality of emergency department care by removing waste using lean value stream mapping", *International Journal of Clinical Leadership*, Vol. 17 No. 1, pp. 25-30.

de Barros, L.B., Caldas, L.P., Bohomol, E., Sarantopoulos, A., Minatogawa, V. and Gasparino, R.C. (2022), "Evaluation of waste related to the admission process of low-complexity patients in emergency services, in light of the lean healthcare philosophy", *International Journal of Environmental Research and Public Health*, Vol. 19 No. 12, p. 7044, doi: 10.3390/ijerph19127044.

De Freitas, L., Goodacre, S., O'Hara, R., Thokala, P. and Hariharan, S. (2020), "Qualitative exploration of patient flow in a Caribbean emergency department", *BMJ Open*, Vol. 10 No. 12, e041422, doi: 10.1136/bmjopen-2020-041422.

De Ramón Fernández, A., Ruiz Fernández, D. and Sabuco García, Y. (2020), "Business process management for optimizing clinical processes: a systematic literature review", *Health Informatics Journal*, Vol. 26 No. 2, pp. 1305-1320, doi: 10.1177/1460458219877092.

Denicolo, K.S., Corboy, J.B., Simon, N.-J.E., Balsley, K.J., Skarzynski, D.J., Roben, E.C. and Alpern, E.R. (2021), "Multidisciplinary Kaizen event to improve adherence to a sepsis clinical care guideline", *Pediatric Quality and Safety*, Vol. 6 No. 4, p. e435, doi: 10.1097/pq9.0000000000000435.

Di Somma, S., Paladino, L., Vaughan, L., Lalle, I., Magrini, L. and Magnanti, M. (2015), "Overcrowding in emergency department: an international issue", *Internal and Emergency Medicine*, Vol. 10 No. 2, pp. 171-175, doi: 10.1007/s11739-014-1154-8.

Dobrzykowski, D.D., McFadden, K.L. and Vonderembse, M.A. (2016), "Examining pathways to safety and financial performance in hospitals: a study of lean in professional service operations", *Journal of Operations Management*, Vols 42-43 No. 1, pp. 39-51, doi: 10.1016/j.jom.2016.03.001.

Doran, K.M., Colucci, A.C., Hessler, R.A., Ngai, C.K., Williams, N.D., Wallach, A.B., Tanner, M., Allen, M.H. and Goldfrank, L.R. (2013), "An intervention connecting low-acuity emergency department patients with primary care: effect on future primary care linkage", *Annals of Emergency Medicine*, Vol. 61 No. 3, pp. 312-321.e7, doi: 10.1016/j.annemergmed.2012.10.021.

dos Santos Leandro, G., Moro, C., Miura, D.Y., Borges, R.M., Safanelli, J., Moro, C.H.C. and Santos, E.A.P. (2021), "Process mining leveraging the analysis of patient journey and outcomes: stroke assistance during the Covid-19 pandemic", *Knowledge Management and E-Learning*, Vol. 13 No. 4, pp. 421-437, doi: 10.34105/j.kmel.2021.13.023.

Dosi, C., Iori, M., Kramer, A. and Vignoli, M. (2021), "Successful implementation of discrete event simulation: integrating design thinking and simulation approach in an emergency department", *Production Planning & Control*, Vol. 34 No. 13, pp. 1-15, doi: 10.1080/09537287.2021.1996651.

Essoussi, I.E., Masmoudi, M. and Babai, M.Z. (2023), "Multi-criteria decision-making for collaborative COVID-19 surge management and inter-hospital patients' transfer optimisation", *International Journal of Production Research*, Vol. 61 No. 23, pp. 1-30, doi: 10.1080/00207543.2022.2162619.

Ferreira, G.S.A., Silva, U.R., Costa, A.L. and Pádua, S.I.D.D.D. (2018), "The promotion of BPM and lean in the health sector: main results", *Business Process Management Journal*, Vol. 24 No. 2, pp. 400-424, doi: 10.1108/BPMJ-06-2016-0115.

Figueroa, C.A., Harrison, R., Chauhan, A. and Meyer, L. (2019), "Priorities and challenges for health leadership and workforce management globally: a rapid review", *BMC Health Services Research*, Vol. 19 No. 1, p. 239, doi: 10.1186/s12913-019-4080-7.

Gabriel, G.T., Campos, A.T., Magacho, A.L., Segismondi, L.C., Vilela, F.F., de Queiroz, J.A. and Montevechi, J.A.B. (2020), "Lean thinking by integrating with discrete event simulation and design of experiments: an emergency department expansion", *PeerJ Computer Science*, Vol. 6, e284, doi: 10.7717/PEERJ-CS.284.

Gabryelczyk, R., Sipior, J.C. and Biernikowicz, A. (2022), "Motivations to adopt BPM in view of digital transformation", *Information Systems Management*, pp. 1-17, doi: 10.1080/10580530.2022.2163324.

Gualandi, R., Masella, C. and Tartaglini, D. (2019), "Improving hospital patient flow: a systematic review", *Business Process Management Journal*, Vol. 26 No. 6, pp. 1541-1575, doi: 10.1108/BPMJ-10-2017-0265.

Günal, M.M. and Pidd, M. (2010), "Discrete event simulation for performance modelling in health care: a review of the literature", *Journal of Simulation*, Vol. 4 No. 1, pp. 42-51, doi: 10.1057/jos.2009.25.

Guo, H., Goldsman, D., Tsui, K.-L., Zhou, Y. and Wong, S.-Y. (2016), "Using simulation and optimisation to characterise durations of emergency department service times with incomplete data", *International Journal of Production Research*, Vol. 54 No. 21, pp. 6494-6511, doi: 10.1080/00207543.2016.1205760.

Hummel, J., Evans, P.C. and Lee, H. (2010), "Medication reconciliation in the emergency department: opportunities for workflow redesign", *BMJ Quality and Safety*, Vol. 19 No. 6, pp. 531-535, doi: 10.1136/qshc.2009.035121.

Joseph, J.W. and White, B.A. (2020), "Emergency department operations", *Emergency Medicine Clinics of North America*, Vol. 38 No. 3, pp. 549-562, doi: 10.1016/j.emc.2020.04.005.

Kang, H., Nembhard, H.B., Rafferty, C. and DeFlitch, C.J. (2014), "Patient flow in the emergency department: a classification and analysis of admission process policies", *Annals of Emergency Medicine*, Vol. 64 No. 4, pp. 335-342.e8, doi: 10.1016/j.annemergmed.2014.04.011.

Kelen, G.D., Wolfe, R., D'onofrio, G., Mills, A.M., Diercks, D., Stern, S.A., Wadman, M.C. and Sokolove, P.E. (2021), "Emergency department crowding: the canary in the health care system", *NEJM Catalyst*, doi: 10.1056/CAT.21.0217.

Kennedy, M., MacBean, C.E., Brand, C., Sundararajan, V. and McD Taylor, D. (2008), "Review article: leaving the emergency department without being seen", *Emergency Medicine Australasia*, Vol. 20 No. 4, pp. 306-313, doi: 10.1111/j.1742-6723.2008.01103.x.

King, D.L., Ben-Tovim, D.I. and Bassham, J. (2006), "Redesigning emergency department patient flows: application of Lean Thinking to health care", *EMA - Emergency Medicine Australasia*, Vol. 18 No. 4, pp. 391-397, doi: 10.1111/j.1742-6723.2006.00872.x.

Kulshrestha, A. and Singh, J. (2016), "Inter-hospital and intra-hospital patient transfer: recent concepts", *Indian Journal of Anaesthesia*, Vol. 60 No. 7, p. 451, doi: 10.4103/0019-5049.186012.

Le, D.X., Do, H.T., Bui, K.T., Hoang, T.Q., Nguyen, G.H., Nguyen, A.V., Nguyen, Q.T., Gorgui-Naguib, H. and Naguib, R.N.G. (2022), "Lean management for improving hospital waiting times-case study of a Vietnamese public/general hospital emergency department", *International Journal of Health Planning and Management*, Vol. 37 No. 1, pp. 156-170, doi: 10.1002/hpm.3310.

Lima, R.M., Dinis-Carvalho, J., Souza, T.A., Vieira, E. and Gonçalves, B. (2021), "Implementation of lean in health care environments: an update of systematic reviews", *International Journal of Lean Six Sigma*, Vol. 12 No. 2, pp. 399-431, doi: 10.1108/IJLSS-07-2019-0074.

Lindner, G. and Woitok, B.K. (2021), "Emergency department overcrowding", *Wiener Klinische Wochenschrift*, Vol. 133 Nos 5-6, pp. 229-233, doi: 10.1007/s00508-019-01596-7.

Lisiecka-Bielanowicz, M. and Lisiecka, K. (2020), "Lean healthcare in hospital emergency department. Case study", *Scientific Papers of Silesian University of Technology. Organization and Management Series*, Vol. 2020 No. 143, doi: 10.29119/1641-3466.2020.143.10.

Mangum, C.D., Andam-Mejia, R.L., Hale, L.R., Mananquil, A., Fulcher, K.R., Hall, J.L., McDonald, L.A.C., Sjogren, K.N., Villalon, F.D., Mehta, A., Shomaker, K., Johnson, E.A. and Godambe, S.A. (2021), "Use of lean healthcare to improve hospital throughput and reduce LOS", *Pediatric Quality and Safety*, Vol. 6 No. 5, p. e473, doi: 10.1097/pq9.0000000000000473.

Maninchedda, M., Proia, A.S., Bianco, L., Aromatario, M., Orsi, G.B. and Napoli, C. (2023), "Main features and control strategies to reduce overcrowding in emergency departments: a systematic review of the literature", *Risk Management and Healthcare Policy*, Vol. Vol. 16, pp. 255-266, doi: 10.2147/RMHP.S399045.

Manning, L. and Islam, M.S. (2023), "A systematic review to identify the challenges to achieving effective patient flow in public hospitals", *The International Journal of Health Planning and Management*, Vol. 38 No. 3, pp. 805-828, doi: 10.1002/hpm.3626.

Marco, C.A., Bryant, M., Landrum, B., Drerup, B. and Weeman, M. (2021), "Refusal of emergency medical care: an analysis of patients who left without being seen, eloped, and left against medical advice", *The American Journal of Emergency Medicine*, Vol. 40, pp. 115-119, doi: 10.1016/j.ajem.2019.158490.

Morganti, K.G., Bauhoff, S., Blanchard, J.C., Abir, M., Iyer, N., Smith, A.C., Vesely, J.V., Okeke, E.N. and Kellermann, A.L. (2013), "The evolving role of emergency departments in the United States", *Rand Health Quarterly*, Vol. 3 No. 2, p. 3.

Neuner, C., Bocciarelli, P. and D'Ambrogio, A. (2021), "BPMN-based simulation analysis of the COVID-19 impact on emergency departments: a case study in Italy", *2021 Winter Simulation Conference (WSC)*, IEEE, pp. 1-12, doi: 10.1109/WSC52266.2021.9715495.

Noy, C. (2008), "Sampling knowledge: the hermeneutics of snowball sampling in qualitative research", *International Journal of Social Research Methodology*, Vol. 11 No. 4, pp. 327-344, doi: 10.1080/13645570701401305.

Ouda, E., Sleptchenko, A. and Simsekler, M.C.E. (2023), "Comprehensive review and future research agenda on discrete-event simulation and agent-based simulation of emergency departments", *Simulation Modelling Practice and Theory*, Vol. 129, 102823, doi: 10.1016/j.simpat.2023.102823.

Page, M.J., McKenzie, J.E., Bossuyt, P.M., Boutron, I., Hoffmann, T.C., Mulrow, C.D., Shamseer, L., Tetzlaff, J.M., Akl, E.A., Brennan, S.E., Chou, R., Glanville, J., Grimshaw, J.M., Hróbjartsson, A., Lalu, M.M., Li, T., Loder, E.W., Mayo-Wilson, E., McDonald, S., McGuinness, L.A., Stewart, L.A., Thomas, J., Tricco, A.C., Welch, V.A., Whiting, P. and Moher, D. (2021), "The PRISMA 2020 statement: an updated guideline for reporting systematic reviews", *BMJ*, Vol. 372, p. n71, doi: 10.1136/bmj.n71.

Powers, W.J., Rabinstein, A.A., Ackerson, T., Adeoye, O.M., Bambakidis, N.C., Becker, K., Biller, J., Brown, M., Demaerschalk, B.M., Hoh, B., Jauch, E.C., Kidwell, C.S., Leslie-Mazwi, T.M., Ovbiagele, B., Scott, P.A., Sheth, K.N., Southerland, A.M., Summers, D.V. and Tirschwell, D.L. (2019), "Guidelines for the early management of patients with acute ischemic stroke: 2019 update to the 2018 guidelines for the early management of acute ischemic stroke: a guideline for healthcare professionals from the American heart association/American stroke association", *Stroke*, Vol. 50 No. 12, pp. e344-e418, doi: 10.1161/STR.0000000000000211.

Pufahl, L., Zerbato, F., Weber, B. and Weber, I. (2022), "BPMN in healthcare: challenges and best practices", *Information Systems*, Vol. 107, 102013, doi: 10.1016/j.is.2022.102013.

Rother, M. and Shook, J. (1999), *Learning to See: Value Stream Mapping to Add Value and Eliminate Muda*, The Lean Enterprise Institute, Brookline, MA.

Ryan, A., Hunter, K., Cunningham, K., Williams, J., O'Shea, H., Rooney, P. and Hickey, F. (2013), "STEPS: lean thinking, theory of constraints and identifying bottlenecks in an emergency department", *Irish Medical Journal*, Vol. 106 No. 4, pp. 105-107.

Sackett, D.L. and Rennie, D. (1992), "The science of the art of the clinical examination", *JAMA*, Vol. 267 No. 19, pp. 2650-2652, doi: 10.1001/jama.267.19.2650.

Savioli, G., Ceresa, I.F., Gri, N., Bavestrello Piccini, G., Longhitano, Y., Zanza, C., Piccioni, A., Esposito, C., Ricevuti, G. and Bressan, M.A. (2022), "Emergency department overcrowding: understanding the factors to find corresponding solutions", *Journal of Personalized Medicine*, Vol. 12 No. 2, p. 279, doi: 10.3390/jpm12020279.

Soares-Oliveira, M. and Araújo, F. (2014), "Implementação de um sistema regional de resposta emergente ao acidente vascular cerebral: primeiros resultados", *Revista Portuguesa de Cardiologia*, Vol. 33 No. 6, pp. 329-335, doi: 10.1016/j.repc.2013.11.004.

Solberg, L.I., Asplin, B.R., Weinick, R.M. and Magid, D.J. (2003), "Emergency department crowding: consensus development of potential measures", *Annals of Emergency Medicine*, Vol. 42 No. 6, pp. 824-834, doi: 10.1016/S0196-0644(03)00816-3.

Tlapa, D., Zepeda-Lugo, C.A., Tortorella, G.L., Baez-Lopez, Y.A., Limon-Romero, J., Alvarado-Iniesta, A. and Rodriguez-Borbon, M.I. (2020), "Effects of lean healthcare on patient flow: a systematic review", *Value in Health*, Vol. 23 No. 2, pp. 260-273, doi: 10.1016/j.jval.2019.11.002.

Van Der Linden, M.C., Van Loon-Van Gaalen, M., Richards, J.R., Van Woerden, G. and Van Der Linden, N. (2023), "Effects of process changes on emergency department crowding in a changing world: an interrupted time-series analysis", *International Journal of Emergency Medicine*, Vol. 16 No. 1, p. 6, doi: 10.1186/s12245-023-00479-z.

van der Linden, M.C., de Beaufort, R.A.Y., Meylaerts, S.A.G., van den Brand, C.L. and van der Linden, N. (2019), "The impact of medical specialist staffing on emergency department patient flow and satisfaction", *European Journal of Emergency Medicine*, Vol. 26 No. 1, pp. 47-52, doi: 10.1097/MEJ.0000000000000487.

Wang, X., Gong, X., Geng, N., Jiang, Z. and Zhou, L. (2020), "Metamodel-based simulation optimisation for bed allocation", *International Journal of Production Research*, Vol. 58 No. 20, pp. 6315-6335, doi: 10.1080/00207543.2019.1677962.

Wang, T.-K., Yang, T., Yang, C.-Y. and Chan, F.T.S. (2015), "Lean principles and simulation optimization for emergency department layout design", *Industrial Management and Data Systems*, Vol. 115 No. 4, pp. 678-699, doi: 10.1108/IMDS-10-2014-0296.

White, K., Scott, I.A., Vaux, A. and Sullivan, C.M. (2015), "Rapid response teams in adult hospitals: time for another look?", *Internal Medicine Journal*, Vol. 45 No. 12, pp. 1211-1220, doi: 10.1111/imj.12845.

Yarmohammadian, M., Rezaei, F., Haghshenas, A. and Tavakoli, N. (2017), "Overcrowding in emergency departments: a review of strategies to decrease future challenges", *Journal of Research in Medical Sciences*, Vol. 22 No. 1, p. 23, doi: 10.4103/1735-1995.200277.

Zhao, Y., Peng, Q., Strome, T., Weldon, E., Zhang, M. and Chochinov, A. (2015), "Bottleneck detection for improvement of Emergency Department efficiency", *Business Process Management Journal*, Vol. 21 No. 3, pp. 564-585, doi: 10.1108/BPMJ-06-2014-0060.

About the authors

Rui M. Lima is an associate professor at the Department of Production and Systems and a Member of the ALGORITMI/LASI Research Centre of the School of Engineering of the University of Minho, Portugal. His main research interests are in Industrial Engineering and Management fields: Lean Healthcare; Lean Production; Production and Project Management; Agile Project Management; Engineering Education; Project-Based Learning (PBL); and University-Business Cooperation (UBC). He has been collaborating on international projects with universities from Europe, Asia, Africa and South America. He has been collaborating in editorial work with several journals and is the author of more than 230 peer-reviewed

papers in journals, book chapters and conferences. Rui M. Lima is the corresponding author and can be contacted at: rml@dps.uminho.pt

Erik Teixeira Lopes, graduated in Civil Engineering from the University of Brasilia, is currently a PhD student in Industrial and Systems Engineering at the University of Minho. Nowadays, he is working on projects related to healthcare operations management, lean healthcare and Industry 4.0. He has experience in management and technology consulting, engineering education and systems development.

Derek Chaves Lopes is a Medical Doctor from the Superior School of Health Sciences, Brasília, Brazil. Nowadays, he works in two Emergency departments in Brasília and is involved on projects related to Health Information Systems, Burns and Hospital Operations Management.

Bruno S. Gonçalves is currently associate professor in the Mechanic Engineering Department of Polytechnic Institute of Leiria, and his areas of interest are the integration of advanced techniques and models for managing hospital operations in environments of uncertainty and large amounts of data. Since 2009 he has been teaching several courses in optimization, operations management, production management and industrial simulation. Parallel to teaching and research, he has supervised several dissertation projects, having been a member of the jury of several academic tests. He has been involved in several research projects: (1) in the area of production planning and control; (2) in the area of industrial simulation; (3) in the area of operations management, specifically in the creation of a "framework" to support decision-making in the context of hospital operations management.

Pedro G. Cunha as obtained his PhD in Clinical Medicine in 2015 (School of Medicine, Minho University). He is currently a researcher at the Life and Health Research Institute and an Invited Professor at the Medical School, both from Minho University, Portugal. He is the director of the Emergency Department of Hospital Senhora da Oliveira, Guimarães (Teaching Hospital associated with Minho University) and he also coordinates the Clinical Academic Centre of the same Hospital, where more than 130 research projects are currently ongoing. He is involved in several research projects. He has published more than 50 papers in peer-reviewed journals, as well as book chapters; he has been involved as Proponent and current Member of the Portuguese Management Committee of a COST action. He is Associate Editor of one international journal and has been invited to peer-review for several national/international journals. He currently is the Past-President of the Working Group "Hypertension and Brain" of the European Society of Hypertension and the Secretary of the Executive Committee of the Artery Society. He was the founder and coordinator of the Iberian Network on Arterial Structure, Central Hemodynamics and Neurocognition.

For instructions on how to order reprints of this article, please visit our website:
www.emeraldgrouppublishing.com/licensing/reprints.htm
Or contact us for further details: **permissions@emeraldinsight.com**